Series 525 Impact StoreFront

Installation Instructions



Part NO. Y020

July 8, 2025

TABLE OF CONTENTS

SECTION		PAGE
I	GENERAL NOTES	1
II	PARTS IDENTIFICATION	2 - 6
III	FABRICATION	
	A. DRILLING TEMPLATE (SCREW SPLINE VERTICALS)	7
	B. DRILLING TEMPLATE (SHEAR BLOCK VERTICALS)	8
	C. DRILLING TEMPLATE (SHEAR BLOCK AT HORIZONTALS.)	9 -10
	D. SILL WEEP NOTCHES	11
IV	INTERIOR GASKET INSTALLATION	12
V	UNIT ASSEMBLY	
	A. SCREW SPLINE	13
	B. SHEAR BLOCK	14
VI	DOOR FRAME INSTALLATION	15 - 19
VII	SUBSILL FABRICATION AND INSTALLATION	20 - 24
VIII	FRAME INSTALLATION	
	A. SCREW SPLINE	25 - 31
	B. SHEAR BLOCK	32 - 33
	C. PERIMETER SEALANT	34
IX	GLAZING	35 - 42

Minimizing Condensation

NOTE: Please reference EFCO's "Understanding Condensation" brochure which can be obtained through your EFCO representative.

Condensation will form on any surface when unfavorable conditions (interior temperature and relative humidity and exterior temperature) are present. When the formation of excessive condensation is a concern, it is highly recommended that a design professional is utilized to perform an analysis of the shop drawings to recommend the best installation methods. Please contact EFCO representative for information on EFCO's Thermal Analysis Services.

Many current installation practices lead to an increase in the possibility of the formation of condensation. Though not all inclusive, the list of examples below illustrates conditions under which condensation is likely to occur:

1. Bridging system thermal break with non-thermally broken metal flashing or lintels that are exposed to the exterior.
2. System exposure to cold air cavities.
3. Interior relative humidity levels not maintained at recommended levels, see EFCO's "Understanding Condensation" brochure.
4. Inadequate separation between system and surrounding condition at perimeter.
5. Product combinations during the shop drawing stage that result in bridging thermal breaks of one or all products involved.

SECTION I - GENERAL NOTES

The "Series 525" is a framing system that is designed for impact resistance of windborne debris. It can be used as a single-span storefront window wall, a punched opening system, or as a ribbon window system. The system can be fabricated for both screw spline and shear block construction.

The Series 525 system contains primarily stock length material with in-the-field fabrication, or it may be fabricated in the shop for delivery to the job site. Entrance doors are also an integrated part of this system, utilizing frame members and hardware support systems that accommodate doors and door hardware that will withstand impact from windborne debris.

1.) Check the shop drawings, installation instructions, and glazing instructions to become thoroughly familiar with the project. The shop drawings take precedence and include specific details for the project. The installation instructions are of a general nature and cover the most common conditions encountered.

2.) Check all materials on arrival and be sure you have everything required to begin installation. See Section II "PARTS IDENTIFICATION" for parts cross reference.

3.) All work should start from bench marks and/or column center lines as established by the architectural drawings and the general contractor. Installers should check building construction for compliance with architectural documents to ensure the proper window system foundation is available before installation.

4.) The term "sealant" as used in these instructions is defined as: A weather resistant, gunable liquid filler, when dry, provides a resilient, flexible air and water seal between similar and dissimilar materials. In these instructions Dow Corning 795 or equivalent is used when silicone sealant is required and PTI 707 or equivalent is used when butyl type sealant is required. Dow Corning 995 or equivalent structural silicone is used where glazing sealant is required.

All sealant must be compatible with all surfaces on which adhesion is required, including other sealant surfaces. All frame surfaces should be clean and dry. All perimeter substrate shall be cleaned and properly treated to receive sealant.

5.) All materials are to be installed plumb, level, and true.

6.) Protect materials after erection. Cement, plaster, alkaline solutions, and acid based materials can be harmful to the finish. Clean exposed finished surfaces with a mild detergent and water. No abrasive cleaning agent should be used.

SECTION II - PARTS IDENTIFICATION CHART

VERTICALS

	DESCRIPTION	PART NO.
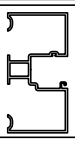	PERIMETER JAMB -SHEAR BLOCK OR SCREW SPLINE-	4476
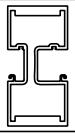	VERTICAL MULLION -SHEAR BLOCK ONLY-	4477
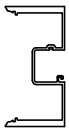	VERTICAL MULLION (Deep Pocket) -SCREW SPLINE ONLY- Use with 4481	4480
	VERTICAL MULLION FILLER (Shallow Pocket) -SCREW SPLINE ONLY- Use with 4480	4481
	MALE EXPANSION MULLION	16D2
	FEMALE EXPANSION MULLION	16D1

HORIZONTALS

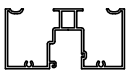	HEAD	4479
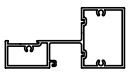	INTERMEDIATE HORIZONTAL	4491
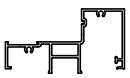	SILL Interlocks with 4482 subsill only. Use with 4485 stop	4475
	GLAZING BEAD Use with 4475 and 4491.	4485
	SUBSILL Interlocks with 4475 sill only.	4482

DOOR FRAMES

	DESCRIPTION	PART NO.
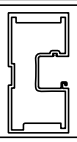	DOOR JAMB -SHEAR BLOCK ONLY- Uses 4437/9155 door stop and 4487/4488 transom glass stop.	4478
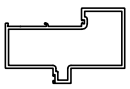	STD. DOOR HEADER -SHEAR BLOCK ONLY- Uses 4486 glazing bead.	4484
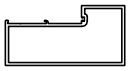	C.O.C. DOOR HEADER -SHEAR BLOCK ONLY- Use with 4486 glazing bead.	4483
	DOOR HEADER GLAZING BEAD Use with 4483 and 4484 door headers.	4486
	FIXED TRANSOM GLASS STOP Use with 4488 glass stop at 4478 door jamb.	4487
	REMOVABLE TRANSOM GLASS STOP Use with 4487 glass stop at 4478 door jamb.	4488
	DOOR STOP Use with 9155 door stop cover at 4478 door jamb.	4437
	DOOR STOP Use with 9155 door stop cover at 2" doors and 4478 door jamb.	4399
	DOOR STOP COVER Use with 4437 door stop at 4478 door jamb.	9155
	SLIDE ARM COVER/DOOR STOP Use with 4483 C.O.C. door header	9914

SHAPES ON THIS PAGE ARE NOT TO SCALE

SECTION II - PARTS IDENTIFICATION CHART (CONT.)

SHEAR BLOCKS

	DESCRIPTION	PART NO.
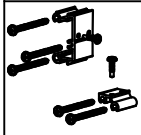	HORIZ. & SILL SHEAR BLOCK PACKAGE LH or RH Use with 4475 & 4491 (1) FU22, (1) FU21, (5) STB5, (2) STS0	K998
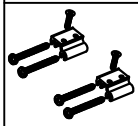	FRAME HEAD SHEAR BLOCK PACKAGE LH or RH Use with 4479 (2) FU21, (2) S101, (2) S103, (4) STB5	K997
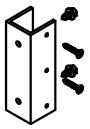	DOOR HEADER SHEAR BLOCK PKG. LH or RH Use with 4484 & 4483 (1) FV67, (2) STV2, (2) STD8	K876

GLAZING GASKETS

	DESCRIPTION	PART NO.
	EXTERIOR GLAZING GASKET Used with 9/16" and 5/8" glazing.	W199
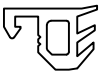	EXTERIOR GLAZING GASKET Used with 7/16" and 1/2" glazing.	W165
	EXTERIOR GLAZING GASKET Used with 11/16" glazing.	W166
	INTERIOR GLAZING GASKET Used with all glazing.	WEQ1

SETTING BLOCKS

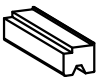	GLASS SETTING BLOCK Used with 4491 horizontal and 4475 sill.	HN43
	GLASS SETTING BLOCK Used with 4483 and 4484 door headers.	HN91

DRILL FIXTURES

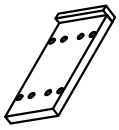	SCREW SPLINE DRILL JIG USED AT VERTICALS	DJ20
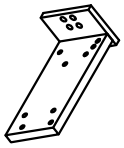	SHEAR BLOCK DRILL JIG USED @ VERTICALS AND HORIZONTALS	DJ19

WEATHER SEALS

	STANDARD WEATHER SEAL @ DOOR STOPS	W138

SHAPES ON THIS PAGE ARE NOT TO SCALE

SECTION II - PARTS IDENTIFICATION CHART (CONT.

FASTENERS

	DESCRIPTION	PART NO.
	#12–14 X 1 1/4" PL–PH–SMS 18–8 TYPE 25 Screw spline assembly screw.	STC8
	#12–11 X 1 5/8 PL–PH–SMS 410 A Used with K997 & K998 shear blocks.	STB5
	#14–10 X 1/2 HW–SMS 18–8 AB Used with K876 door header shear block.	STV2
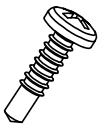	#12–14 X 3/4 PL–PH–SMS 410 TEK–3 Used with K998 shear block.	STS0
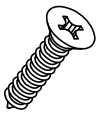	#12–11 X 3/4 PL–FH–SMS 18–8 AB Used with K997 shear block.	S101
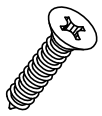	#12–11 X 3/4 PL–FH–SMS 18–8 AB OX Used with K997 shear block.	S103
	#8–18 X 9/16" PL–PH–SMS ZC TEK/2 Used with 4437 door stop & 4487 transom glass stop.	STT6
	#10–12 X 3/4" PL–FH–SMS 18–8 AB Used with K876	STD8
	#12–24 X 1/2 PL–FH–MS18–8 UC Used with K873, K874, K936.	M138
	1/4–20 X 5/16 PL–FH–MS 18–8 UC Used with K873, K874.	M148
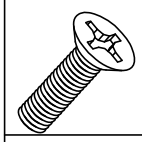	1/4–20 X 5/8 PL–FH–MS 18–8 UC Used with K873, K999, KN04, KN05.	M160
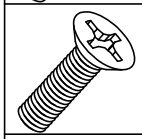	1/4–20 X 5/8 PL–FH–MS 18–8 UC OX Used with K999, KN04, KN05.	M161

	DESCRIPTION	PART NO.
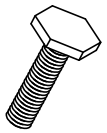	1/4–20 X 1 w/ 9/16 X 3/32 THICK HEAD Used with K873/K874.	MRB8
	#8–32 X 5/8 PL–PH–SMS F Used with K875.	S118
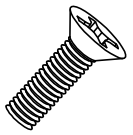	#10–32 X 5/8 PL–FH–MS 18–8 Used with K875.	M130
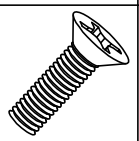	#10–32 X 5/8 PL–FH–MS 18–8 OX Used with K875.	M131
	#12–24 X 3/8 PL–FH–MS 18–8 Used with K990.	M109
	#12–24 X 3/4 PL–FH–MS UC 18–8 Used with K435, K900, & K904.	M100
	#12–24 X 3/4 PL–FH–MS UC 18–8 OX Used with K435, K901, & K905.	M108
	#8–15 X 1 3/4 PL–FH–SMS 18–8 AB Used with 9914 C.O.C. slide arm cover/door stop.	S130
	#6–18 X 3/8" PL–PH–SMS 18–8 AB Used with FW50 End Dam for KN66 Pkg.	STC7

SHAPES ON THIS PAGE ARE NOT TO SCALE

SECTION II – PARTS IDENTIFICATION CHART (CONT.)

MISC. PARTS

	DESCRIPTION	PART NO.
	WATER DEFLECTOR @ INT. HORIZONTAL	FW39
	BOND BREAKER TAPE 4" X .062" USED @ SUBSILL SPLICES	WM01
	DORMA RTS–88 C.O.C. SUPPORT PKG. FOR BUTT & CONTINUOUS HINGES RHRB (1) FV65, (1) M138, (1) M119, (1) M148, (1) MRB8	K874
	DORMA RTS–88 C.O.C. SUPPORT PKG. FOR BUTT & CONTINUOUS HINGES LHRB (1) FV64, (1) M138, (1) M119 (1) M148, (1) MRB8	K873
	DORMA RTS–88 C.O.C. F–CLIP SPACER PKG. FOR BUTT & CONT. HINGES (1) FV66, (2) S118, (1) M130, (1) M131	K875
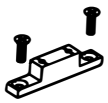	ATTACHMENT CLIP FOR DORMA RTS 88 C.O.C. FOR OFFSET PIVOTS (1) FT17, (2) M100, (2) M108	K435
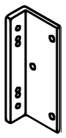	F–CLIP FOR DORMA RTS 88 C.O.C. AT OFFSET PIVOTS USE FASTENERS SUPPLIED WITH CLOSER.	FT16
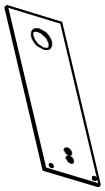	RH COVER PLATE FOR DORMA RTS 88 C.O.C. AT OFFSET PIVOTS (CUSTOMER SPECIFY FINISH)	FT20
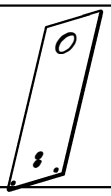	LH COVER PLATE FOR DORMA RTS 88 C.O.C. AT OFFSET PIVOTS (CUSTOMER SPECIFY FINISH)	FT26

MISC. PARTS

	DESCRIPTION	PART NO.
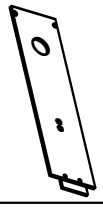	MILL COVER PLATE FOR DORMA RTS 88 C.O.C. AT BUTTS AND CONT. HINGE (CUSTOMER SPECIFY FINISH)	K492
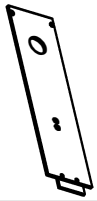	COVER PLATE FOR DORMA RTS 88 C.O.C. AT BUTTS AND CONT. HINGE (CLEAR ANODIZE)	K495
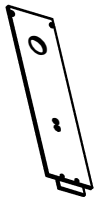	COVER PLATE FOR DORMA RTS 88 C.O.C. AT BUTTS AND CONT. HINGE (DRK. BRNZ. ANODIZE)	K496
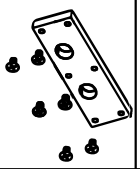	REINFORCING PKG. FOR FLUSH BOLT & 3–POINT LOCK @ HEAD FOR PAIR DOORS	K936
	REINFORCING PKG. FOR 1490 PANIC & 3–POINT LOCK @ THRESHOLD AND 3–POINT LOCK @ HEAD FOR SINGLE DOOR	K990
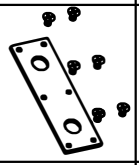	REINFORCING PKG. FOR 1490 PANIC @ THRESHOLD FOR PAIR DOORS	K987
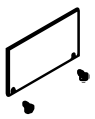	SUBSILL END DAM PACKAGE USED WITH 4482 SUBSILL	KN66

SHAPES ON THIS PAGE ARE NOT TO SCALE

SECTION II - PARTS IDENTIFICATION CHART (CONT.)

MISC. PARTS			MISC. PARTS		
DESCRIPTION		PART NO.	DESCRIPTION		PART NO.
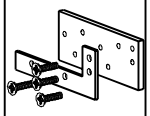	BACKER PLATE & SHIM PACKAGE FOR 180/MP1 TOP PIVOTS	K999			
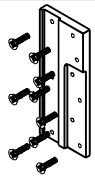	LEFT HAND MP2/195 BOTTOM PIVOT BACKER PACKAGE	KN04			
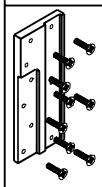	RIGHT HAND MP2/195 BOTTOM PIVOT BACKER PACKAGE	KN05			
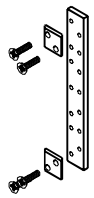	DOOR JAMB MOUNTING PLATE & SPACER PKG. FOR M19/MP3 INT. PIVOT	K968			
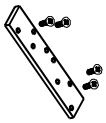	BUTT HINGE BACKER PKG. FOR 4 1/2 X 4 BUTT HINGES (CLEAR)	K900			
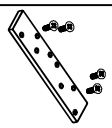	BUTT HINGE BACKER PKG. FOR 4 1/2 X 4 BUTT HINGES (BRONZE)	K901			
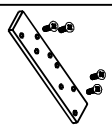	BUTT HINGE BACKER PKG. FOR 5 X 4 1/2 BUTT HINGES (CLEAR)	K904			
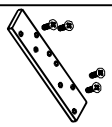	BUTT HINGE BACKER PKG. FOR 5 X 4 1/2 BUTT HINGES (BRONZE)	K905			
			SHAPES ON THIS PAGE ARE NOT TO SCALE		

SECTION III-FABRICATION A - DRILLING TEMPLATE

SCREW SPLINE VERTICALS

USE THE INTERIOR EDGE OF THE VERTICAL TO
ALIGN DRILL JIG DJ20. USE .221 DIA. (#2) DRILL
AT DARKENED AREAS ONLY.

PERIMETER JAMB SHOWN, VERTICAL MULLION AND FILLER SIMILAR.

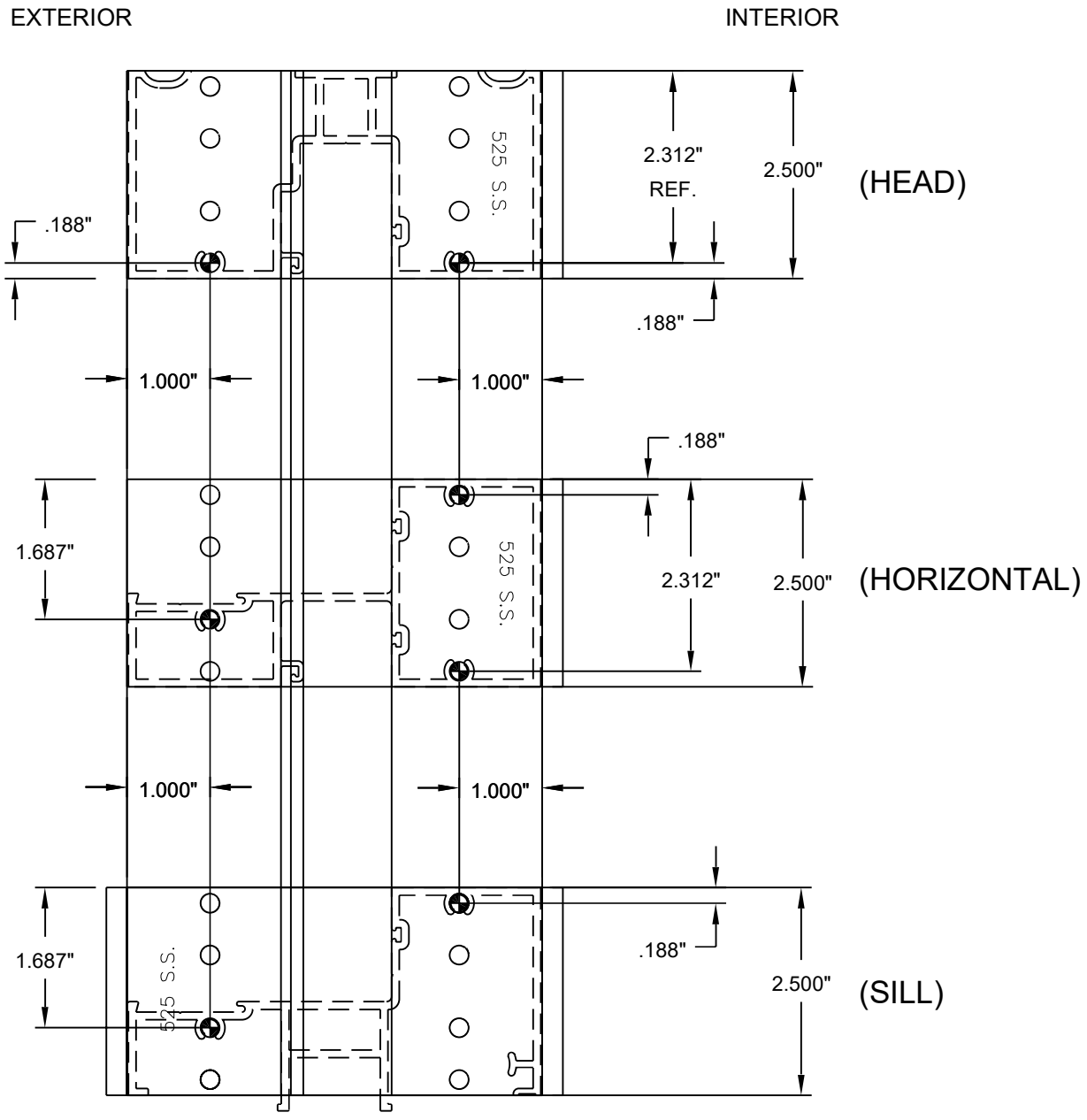

[FIG. 1]

SECTION III-FABRICATION B - DRILLING TEMPLATE

SHEAR BLOCK VERTICALS

USE THE INTERIOR EDGE OF THE VERTICAL TO
ALIGN DRILL JIG DJ19. USE .182 DIA. (#28) DRILL
AT DARKENED AREAS ONLY.

PERIMETER JAMB SHOWN, VERTICAL MULLION SIMILAR.

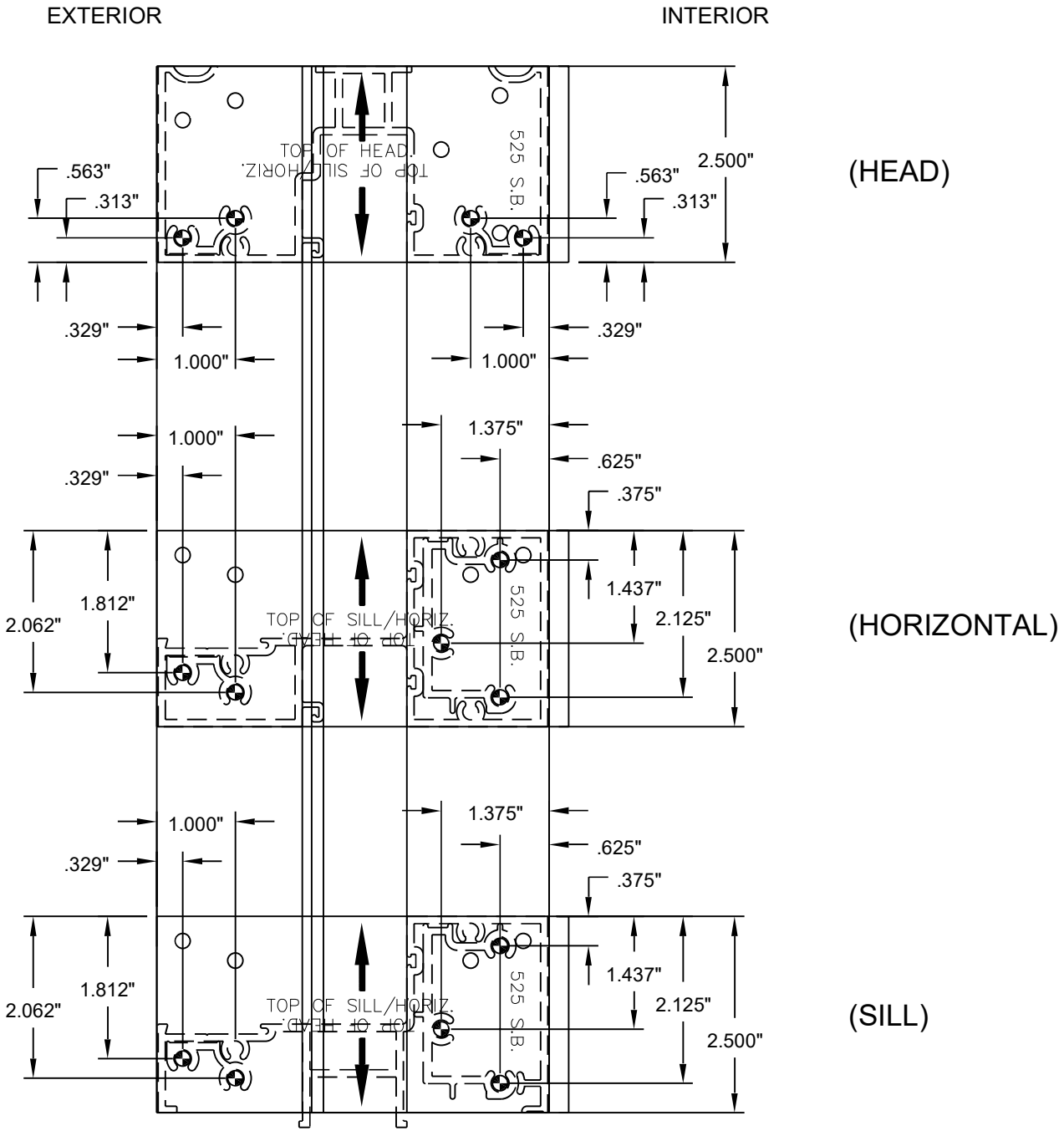

[FIG. 2]

SECTION III-FABRICATION C - DRILLING TEMPLATE

SHEAR BLOCK HORIZONTALS

USE THE INTERIOR & EXTERIOR EDGE AND EACH END OF THE HEAD TO ALIGN DRILL JIG DJ19. USE .228 DIA. (#I) DRILL AT DARKENED AREAS ONLY FOR STEP 1.
AFTER STEP 1 IS COMPLETE, PROCEED TO STEP 2.
COUNTERSINK HOLES 82˚ TO .438 DIAMETER.

(STEP 1)

PREP FOR FRAME HEAD.

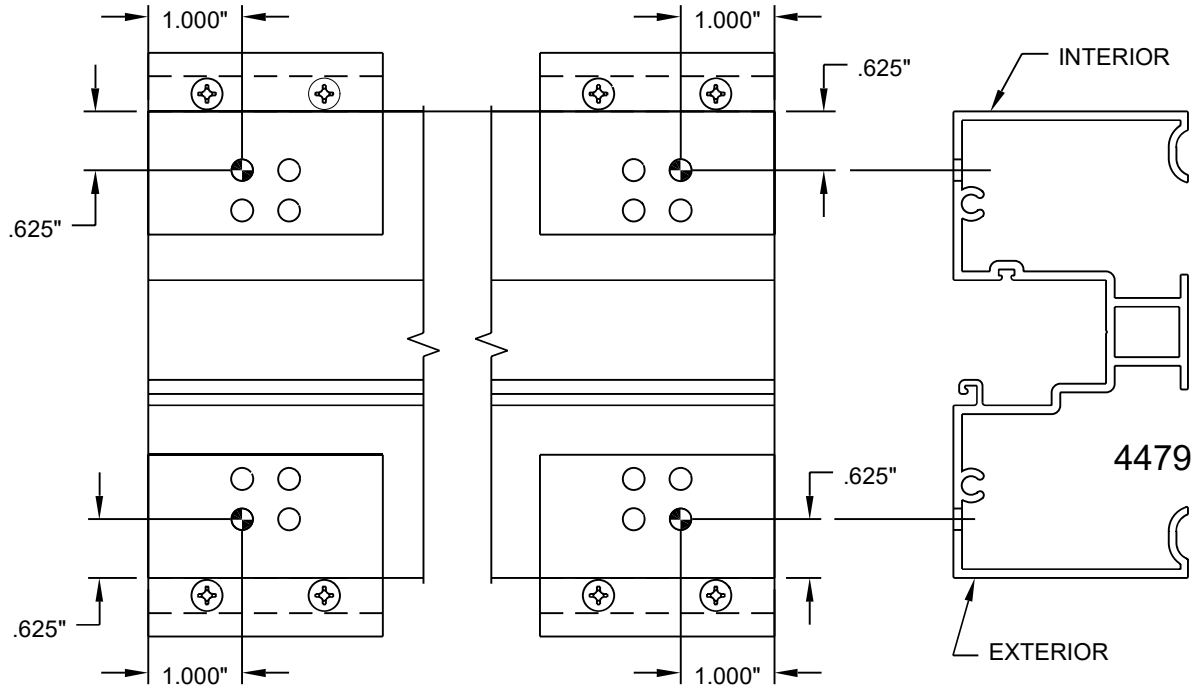

[FIG. 3]

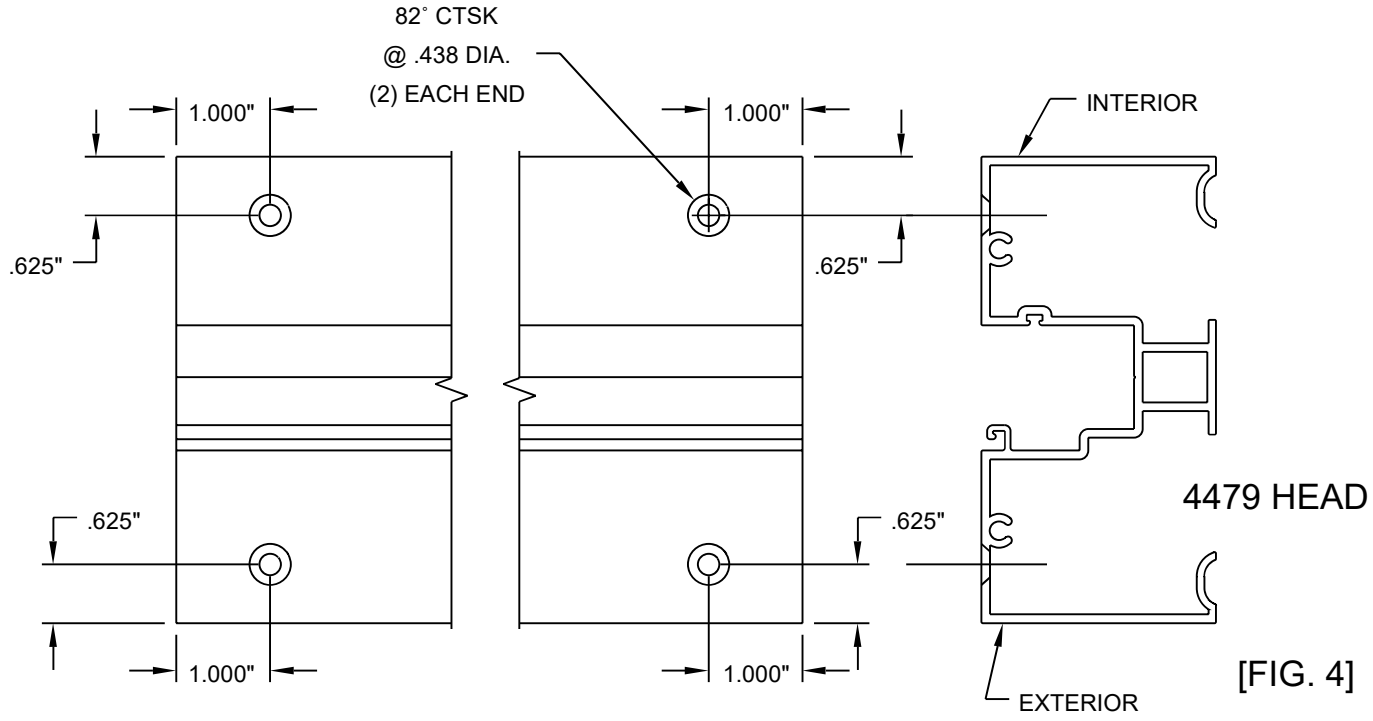

[FIG. 4]

SECTION III-FABRICATION C - DRILLING TEMPLATE

(CONT.)

SHEAR BLOCK HORIZONTALS

USE THE EXTERIOR EDGE AND EACH END OF THE HORIZONTAL OR SILL TO ALIGN DRILL JIG DJ19. USE .228 DIA. (#I) DRILL AT DARKENED AREAS ONLY FOR STEP 1.

AFTER STEP 1 IS COMPLETE, PROCEED TO STEP 2. ROTATE THE MATERIAL, AND USE THE EDGE OF THE GLAZING POCKET AND THE END OF EACH HORIZ. OR SILL TO ALIGN DRILL JIG DJ19. USE A .228 DIA. (#I) DRILL AT DARKENED AREAS ONLY FOR STEP 2.

PREP FOR FRAME
HORIZ. AND SILL

(STEP 1)

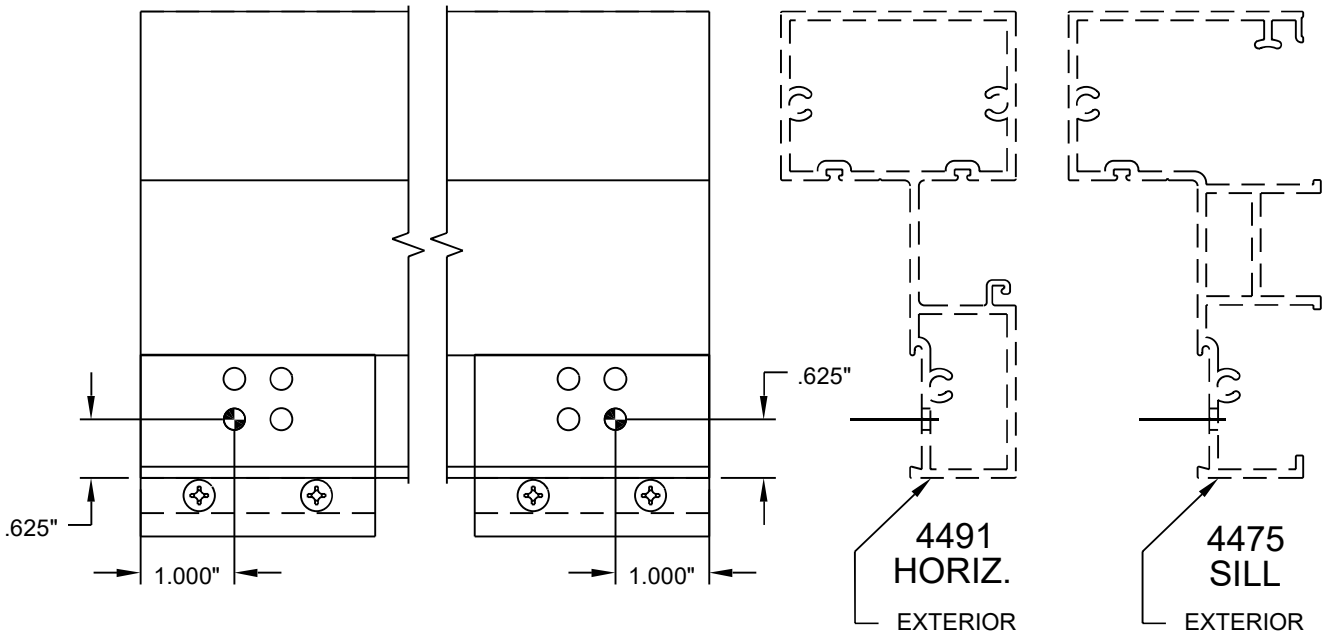

[FIG. 5]

(STEP 2)

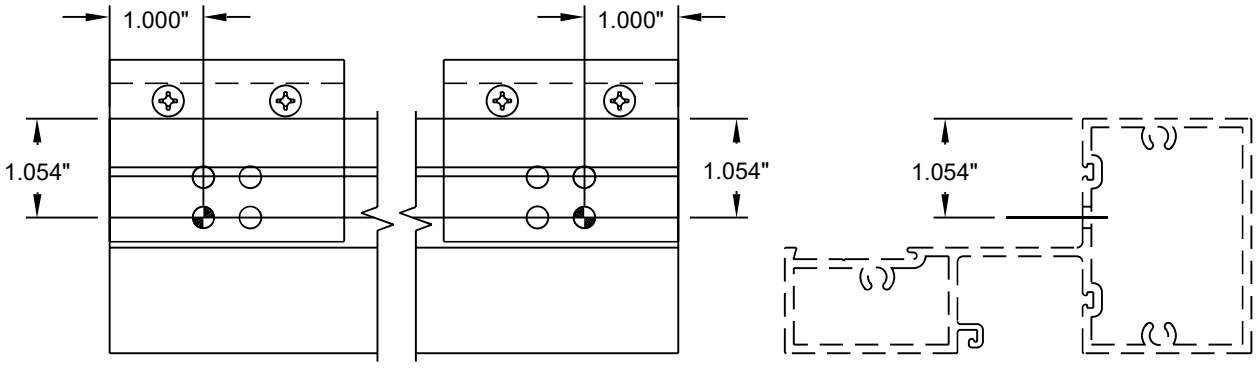

[FIG. 6]

4491 HORIZ. SHOWN
4475 SILL SIM.

SECTION III-FABRICATION D - SILL WEEP NOTCHES

To evacuate water from the system, weep notches must be placed at the ends of each sill. This notch will manifest itself as a 1/8" X 1" notch at each end of the sill, joining the vertical at the exterior face of the sill. The notch also must remove the two extended legs in the middle portion of the sill. These legs must be removed at the same height as the face notch and requires that more material be removed. This material removal will not be seen because it is under the sill and is covered by the subsill. Refer to figures 7 and 8 below for notching layout.

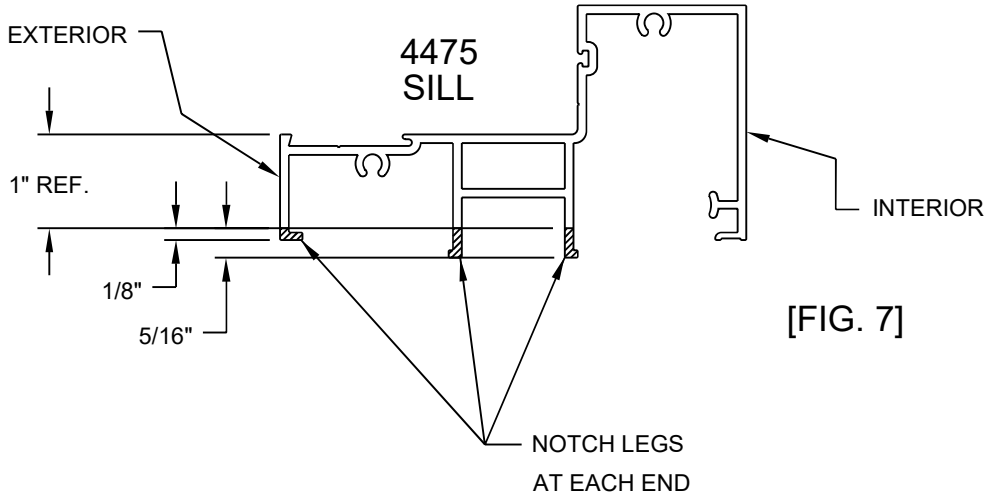

[FIG. 7]

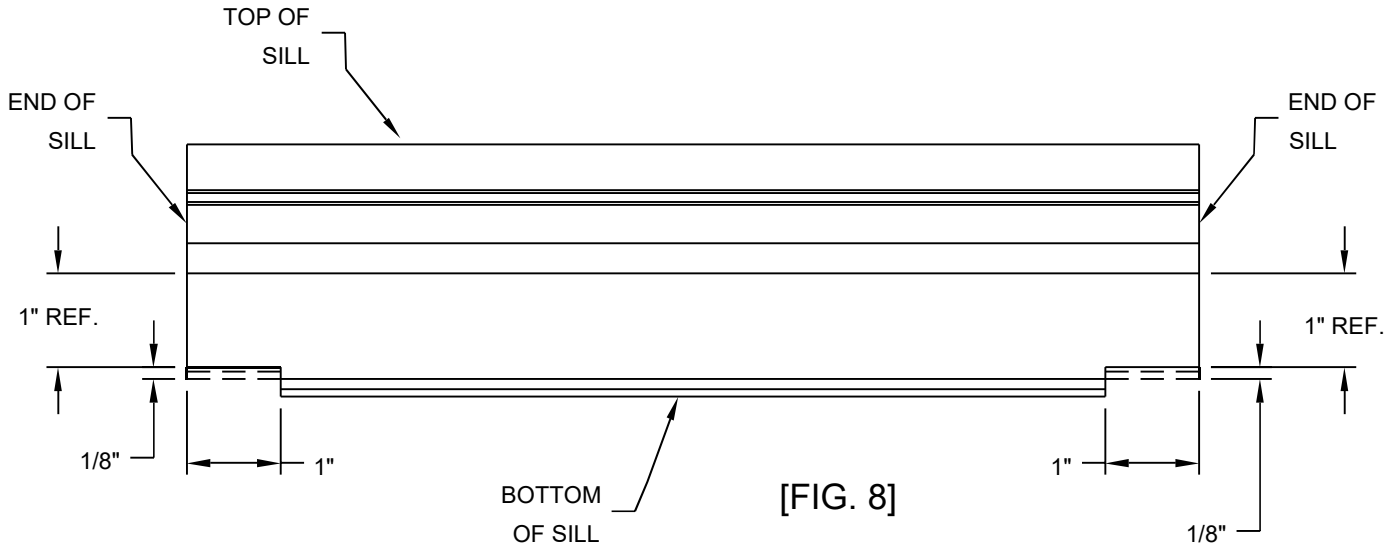

[FIG. 8]

ENSURE THAT THE EXTERIOR NOTCH IS CLEAN AND UNIFORM FOR GOOD WATER FLOW, AND TO MAKE THE NOTCH AS UNOBTRUSIVE AS POSSIBLE WHEN VIEWED FROM THE EXTERIOR.

SECTION IV - INTERIOR GASKET INSTALLATION

STEP 1) INTERIOR GASKET INSTALLATION

After all material is cut to the appropriate length, the WEQ1 interior gasket/sealant backer should be installed. Begin the installation of the WEQ1 by first ensuring that the gasket race is clean and free of debris. The WEQ1 should be cut to the same length as the frame member it is being installed into. Begin the installation on one end of the frame member and slide the WEQ1 into the raceway. It may be advantageous to use a light mixture of soapy water to help the gasket slide into the race. After installation, ensure that the WEQ1 is not stretched an excessive amount.

It is "possible" to install the WEQ1 after the frame members are assembled, but it has to be pressed into the gasket race instead of sliding in. This is "far more difficult and time consuming" and should be avoided unless absolutely necessary. If the WEQ1 must be installed after the frame material is assembled, a tool with a hooked tip of some type will ease the installation of the gasket, as will a light mixture of soapy water. Refer to figure 9 below for WEQ1 installation.

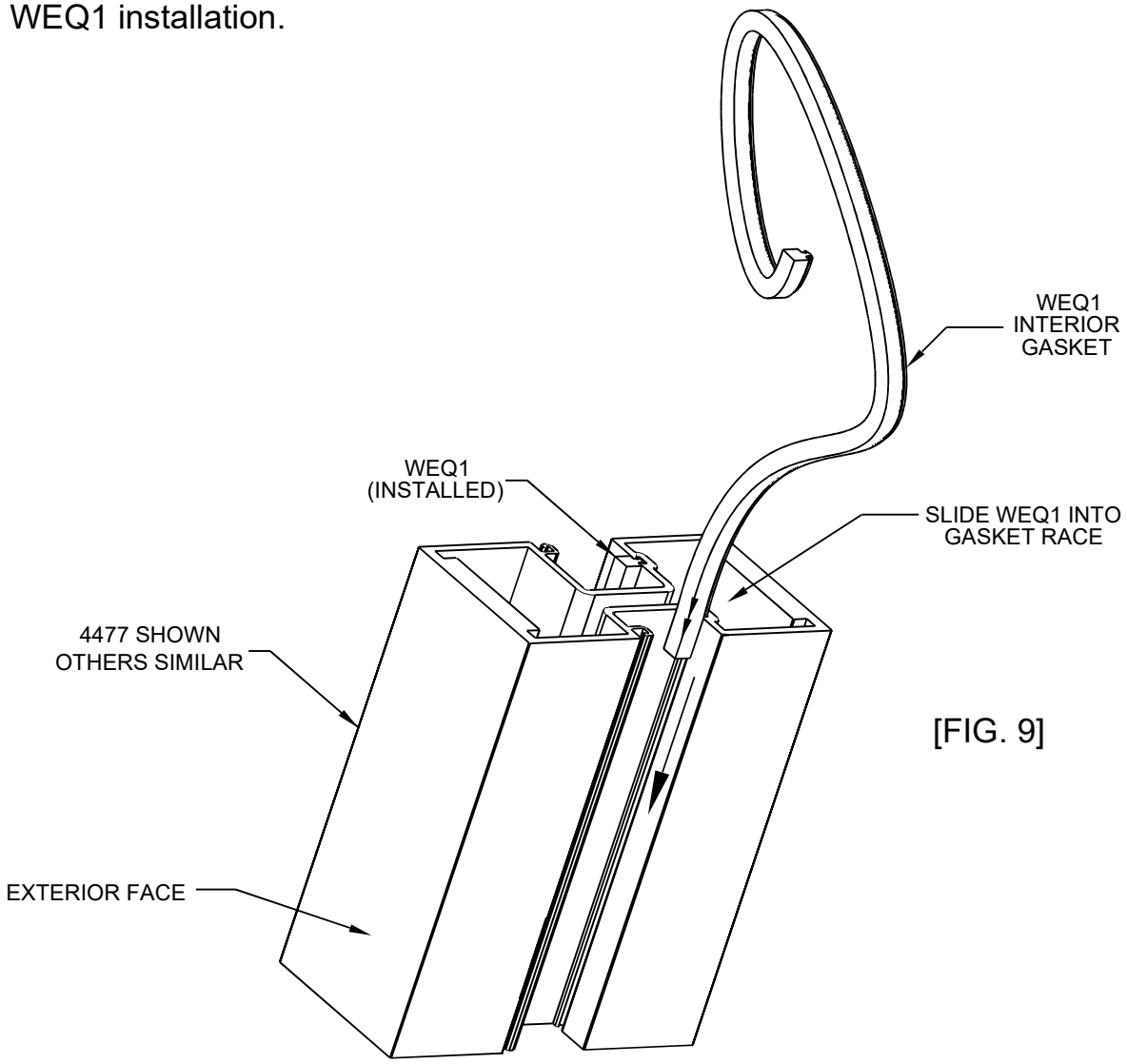

[FIG. 9]

SECTION V-UNIT ASSEMBLY A - SCREW SPLINE

[FIG. 10]

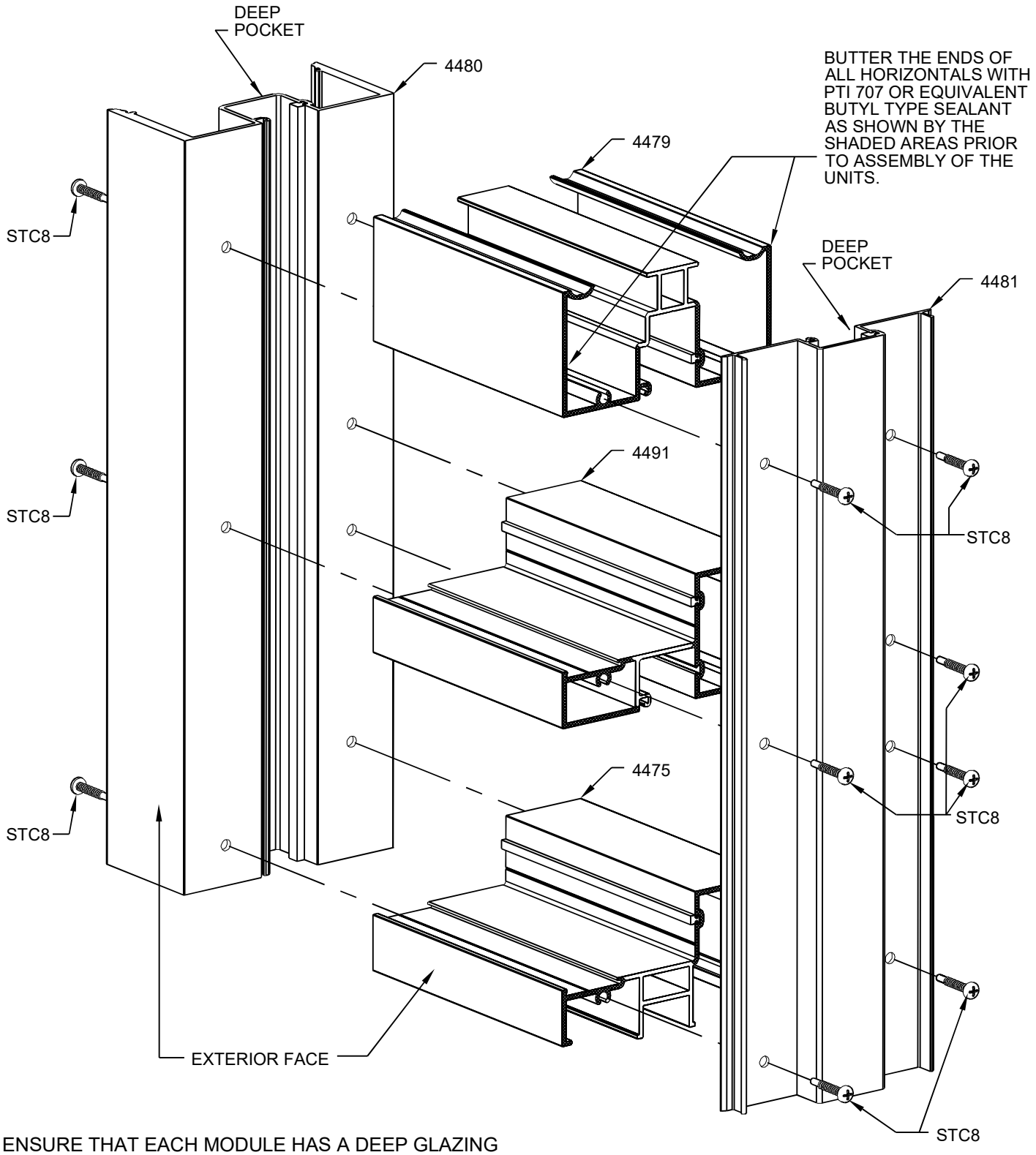

ENSURE THAT EACH MODULE HAS A DEEP GLAZING POCKET ON ONE SIDE AND A SHALLOW GLAZING POCKET ON THE OTHER TO FACILITATE GLAZING INSTALLATION.

SECTION V-UNIT ASSEMBLY B - SHEAR BLOCK

[FIG. 11]

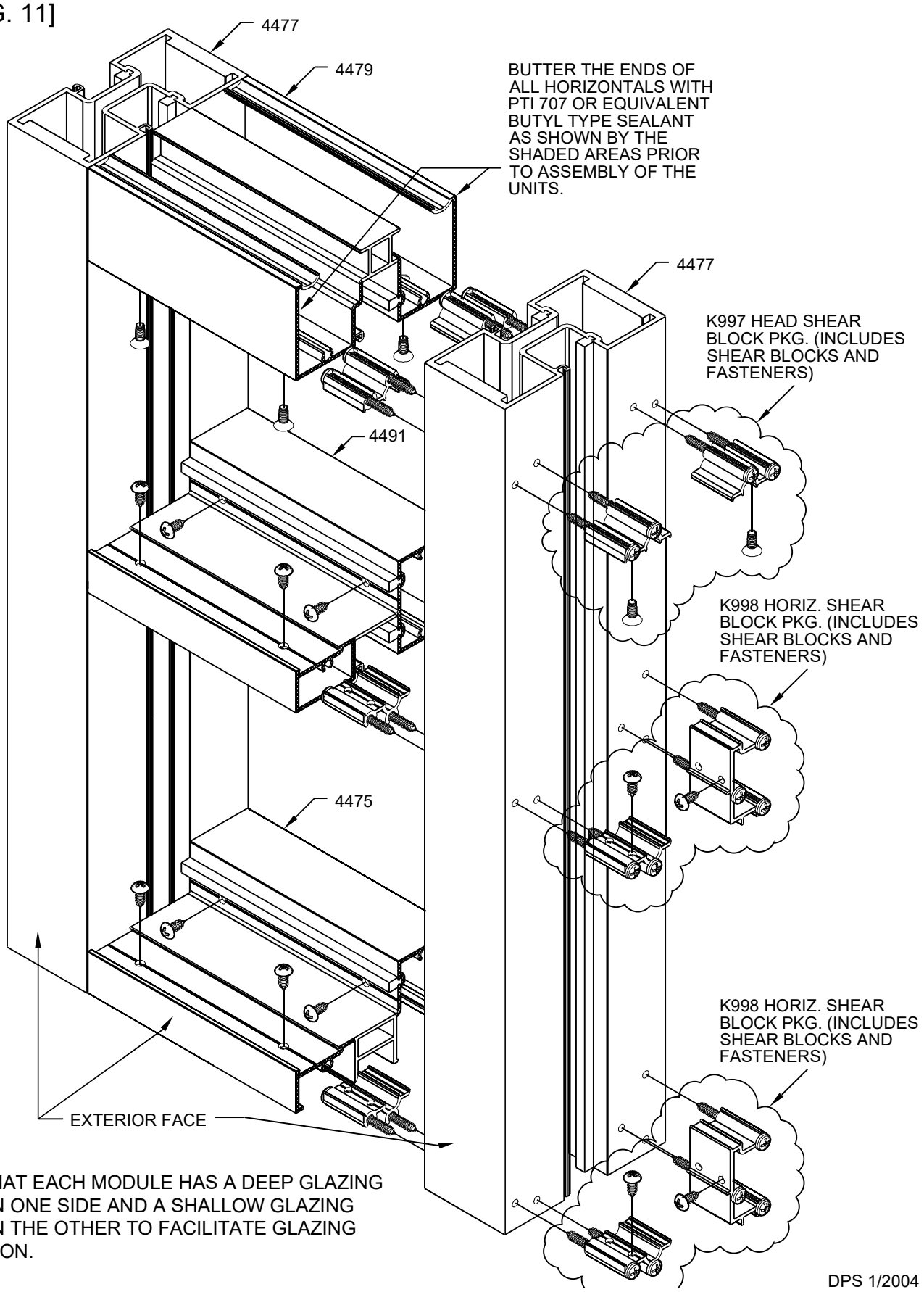

ENSURE THAT EACH MODULE HAS A DEEP GLAZING POCKET ON ONE SIDE AND A SHALLOW GLAZING POCKET ON THE OTHER TO FACILITATE GLAZING INSTALLATION.

SECTION VI - DOOR FRAME INSTALLATION

STEP 1) GENERAL NOTES

Door frames should be installed first, before all other framing material, when required. The system subsill must be installed from the door framing, ensuring that the appropriate clearance is available for the door frame. All subsequent modules must be installed from the door jambs outward. Because of shear block construction methods used with the door framing, the immediate side lites must be shear blocked to the door jambs. From this point, either shear block or screw spline construction methods may be used on the remainder of the framing.

[FIG. 12]

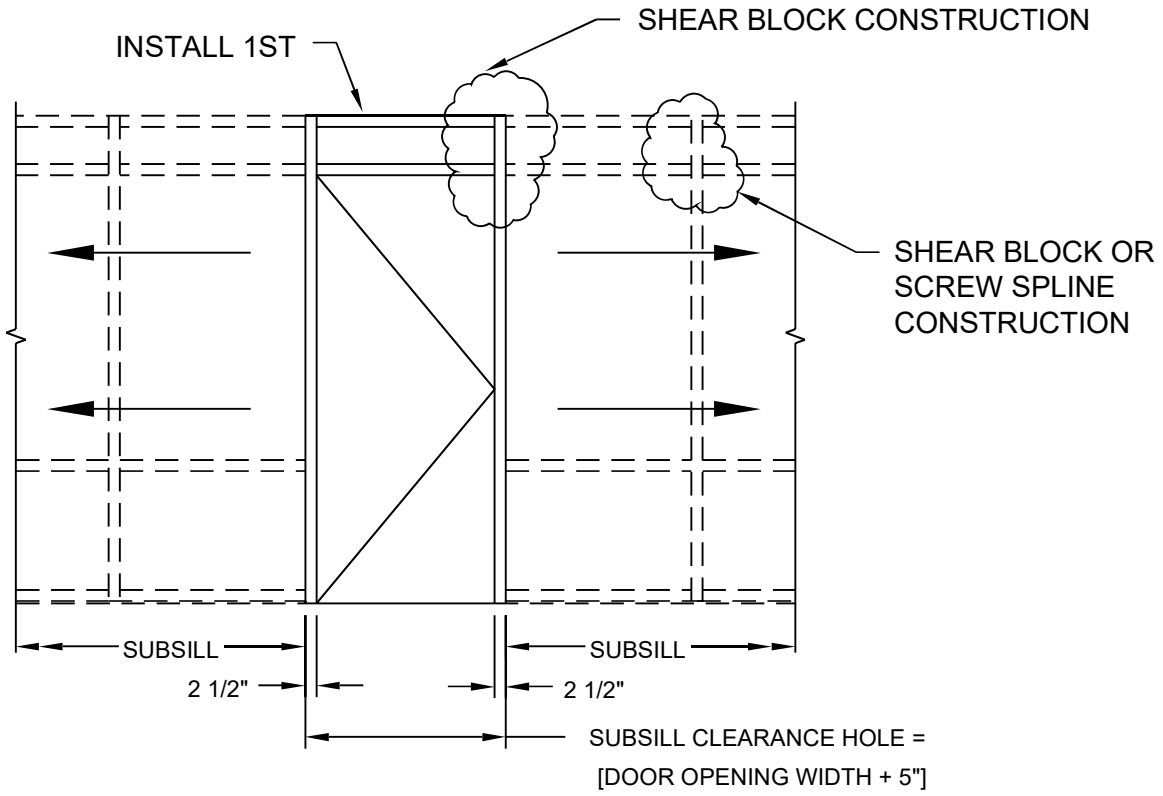

NOTE: Door jambs do not set on the subsill. Door jambs must run through to the floor condition.

STEP 2) SUBSILL INSTALLATION AT DOOR OPENING

Where a door opening is required, use the equation in figure 12 above. Install the door frame true and plumb in the opening as specified on the shop drawings or architectural drawings. Install the subsill in the same manner as illustrated in figures 21-30 on pages 20 through 24. End dams are not required at the door frame end of the subsill. The subsill should butt up tight to the door frame. See figure 13 on page 16 for subsill sealant requirements at the door framing.

SECTION VI - DOOR FRAME INSTALLATION (CONT.)

STEP 3) SUBSILL SEALANT AT DOOR FRAME

Before installing the subsill to the door frame, seal the end of the subsill with Dow Corning 795 or equivalent silicone type sealant. Install the subsill and tool all excess sealant into the joint where the subsill and door jamb meet.
If required, add more sealant to create a smooth watertight seal. Do not build up excess sealant as it will keep the sill member of the frame pushed away from the jamb if allowed to cure before the sidelite frame is installed. At the glazing pockets, a build up of 795 sealant must be used to fill the depth of the pocket up to the level of the subsill at the glazing area. See figure 13 below for sealant application at the subsill to door jamb joint.

[FIG. 13]

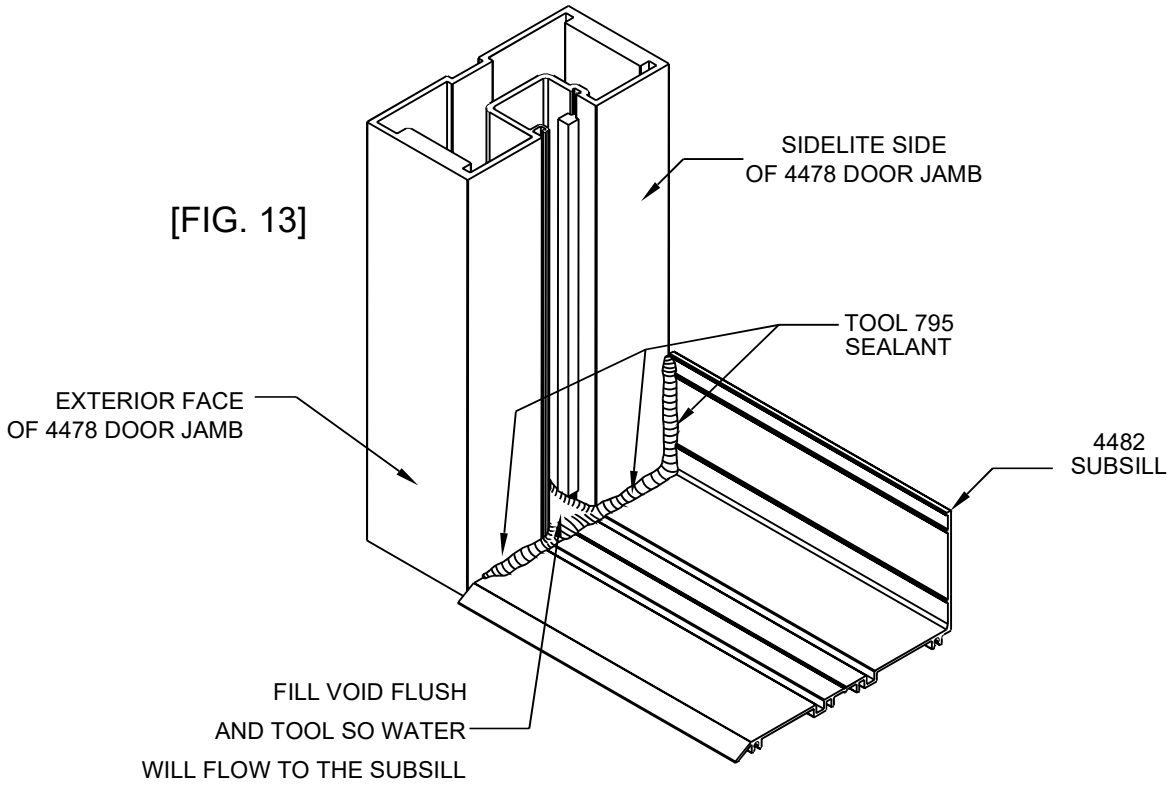

NOTE: Fill the glazing pocket of the door jamb flush with the 795 sealant to the tallest portion of the subsill that bridges the glazing pocket. Tool the silicone so a watertight seal is made, and so that water will be directed out of the glazing pocket and into the subsill.

SECTION VI - DOOR FRAME INSTALLATION (CONT.)

STEP 4) DOOR HEADER IDENTIFICATION

Depending on what type closer is used, two different door headers are available. The header for surface closers has an extruded door stop and will not have a stop applied at the door header. Concealed Overhead Closers (COC) do not have an extruded stop and must have a slide arm cover/door stop applied. The 9914 stop is applied with #8 FH fasteners in prelocated holes. Match drill the holes in the stop to the door header. See figure 14 below for door header identification and stop application.

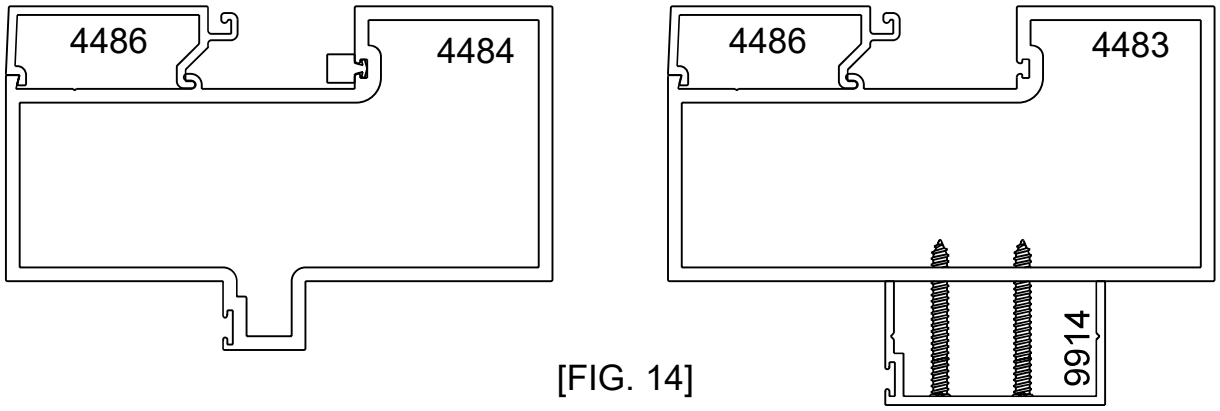

[FIG. 14]

STEP 5) DOOR JAMB STOP APPLICATION

The door jambs are designed to accept a screw applied door stop into a recessed area of the door jamb. The applied door stops should run from the top of the threshold to the bottom of the door header stop. They should be attached with STT6 TEK screws @ 2" from each end and 9" on center Maximum. After the applied stop is attached, snap on the applied stop cover to hide the attachment fasteners. See figure 15 on this page for door stop and cover application.

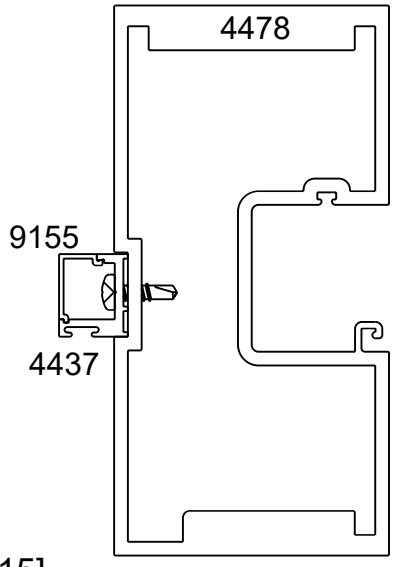

[FIG. 15]

SECTION VI - DOOR FRAME INSTALLATION (CONT.)

STEP 6) SCREW APPLIED TRANSOM STOP APPLICATION

The screw applied vertical transom glass stops should be cut to fit between the top of the door header and the bottom of the transom head. The stop should be attached with STT6 TEK screws 2" from each end and 9" on center Maximum. To facilitate the installation of the door header glass stop, a 3/8" X 3/8" notch must be made on the bottom of the screw applied transom stop. See figures 16 and 17 below for notching and application of the screw applied transom stop.

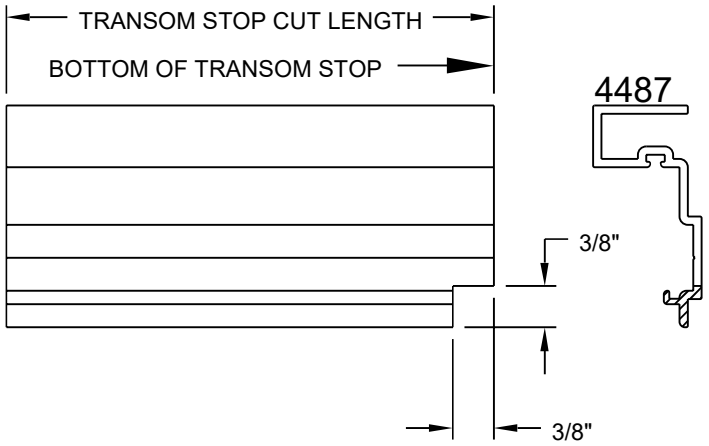

[FIG. 16]

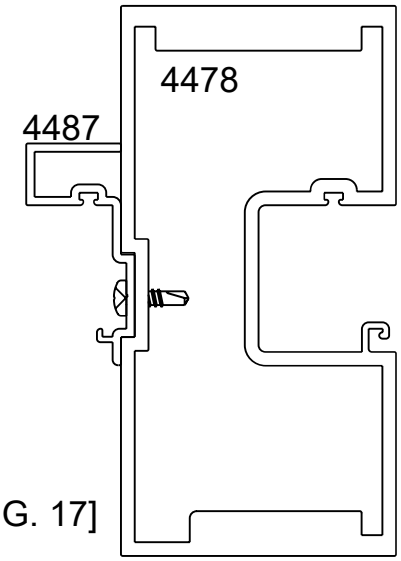

[FIG. 17]

STEP 7) TRANSOM GLASS INSTALLATION

After the screw applied transom stop is applied, the glass can be installed into the DLO. However, it may be advantageous to wait until all frame installation is complete before the glazing is installed. Glazing the transom at a later time may keep the glass from being broken while other trades use the entrance area. Side loading is not required to install the glass. It only has to be centered into the DLO and lifted into the transom head so the setting blocks can be placed. See the dead load charts listed in figure 58 on page 36 for setting block locations.

SECTION VI – DOOR FRAME INSTALLATION

STEP 8) TRANSOM GLASS STOP INSTALLATION

When the glass is installed, the door header glass stop should be installed first. Once this is accomplished, the removable transom glazing stops can be installed. The transom glass stops should run from the bottom of the transom head to the top of the door header. The transom glazing stops do not snap onto the applied transom stops, but rather hook on and are held in place by the exterior glazing gasket pressure. The exterior glazing gasket and the interior glazing seal are installed in the same manner as shown in figures 71–73 on pages 41 and 42. See figures 18–20 below for header glass stop and transom glass stop installation.

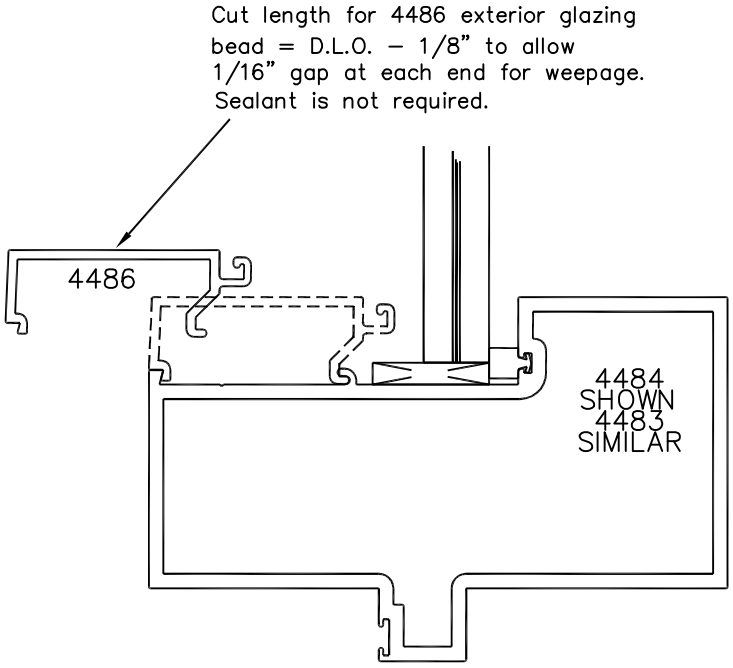

[FIG. 18]

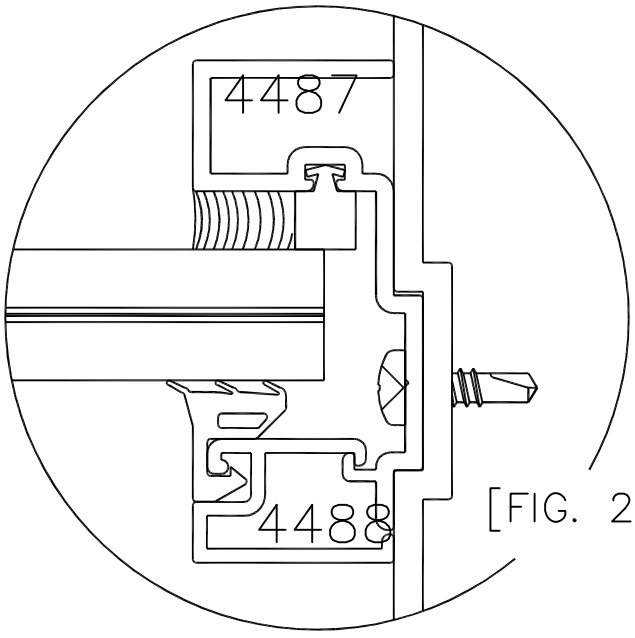

[FIG. 20]

[FIG. 19]

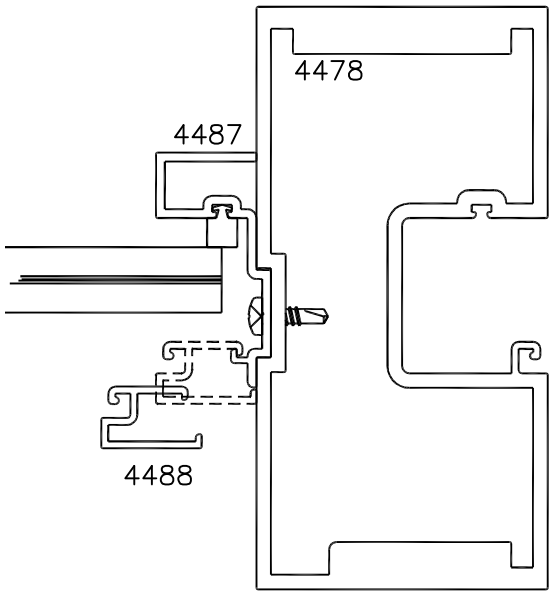

SECTION VII - SUBSILL FABRICATION & INSTALLATION

STEP 1) SUBSILL END DAM REQUIREMENTS

Before installing the subsill into the rough opening, you must determine whether an end dam is required or not. If the surrounding condition does not have an open area or can be used as a water dam, move to Step 3 on page 21.

The first step to installation of the end dams is to measure the rough opening width. The subsill length should be, ROUGH OPENING WIDTH - 3/8". This formula will give enough room for the end dam and attachment screws to fit on both ends of the subsill without interference with the rough opening. (See figure 21 below.)

[FIG. 21]

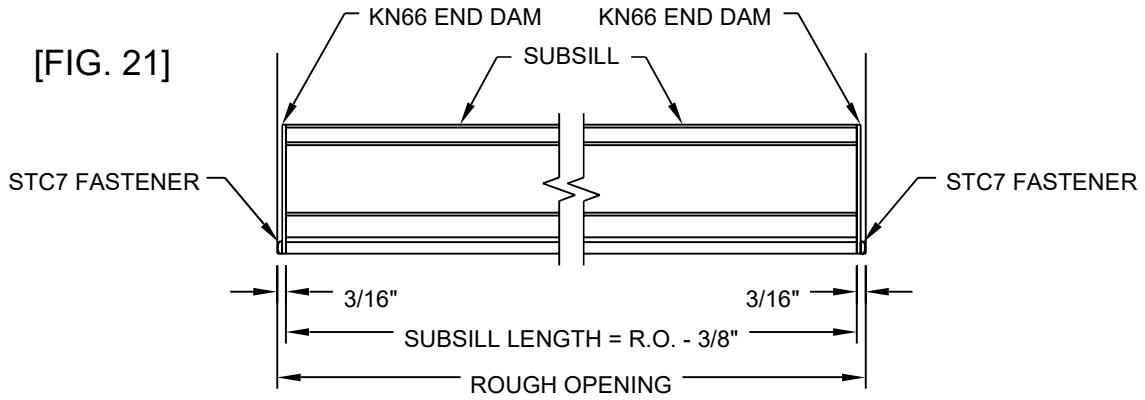

STEP 2) SUBSILL END DAM INSTALLATION

Prior to installing the end dam, apply a generous amount of silicone type sealant to the end of the subsill. Insert the STC7 fasteners into the end dam and attach it to the end of the subsill. After the end dam is attached, the excess sealant should be tooled at the interior of the subsill/end dam joint to provide a watertight seal. Apply more sealant if required for a watertight seal. (See figures 22 and 23 below below.)

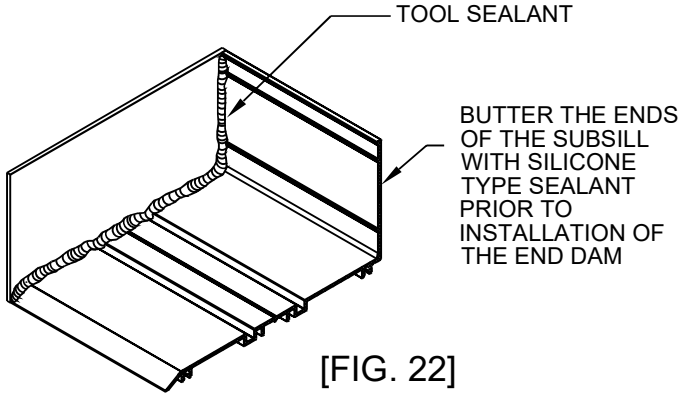

[FIG. 22]

[FIG. 23]

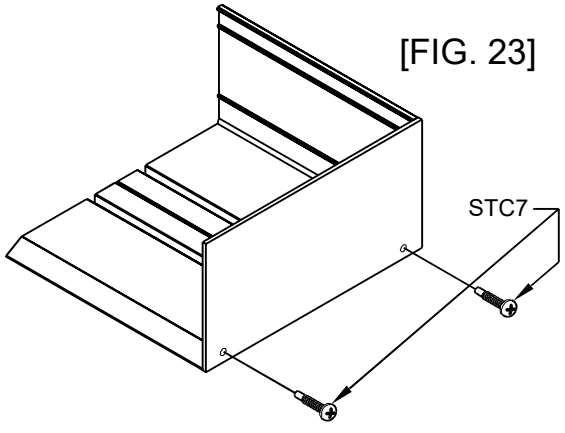

SECTION VII - SUBSILL FABRICATION & INSTALLATION (CONT.)

STEP 3) SUBSILL INSTALLATION WHEN END DAMS ARE NOT REQUIRED

An end dam may not be required in all cases. Before installing a subsill without an end dam, you must determine if the surrounding condition can be used to create a water dam, and if the material will not degrade over time if it comes into contact with water. Once it has been determined that the condition is appropriate to create a water dam, continue the installation of the subsill as described in Steps 4-8 of this section.

STEP 4) BENCH MARKS FOR SUBSILL LOCATION

Before installing the subsill, the exterior face location of the frame should be found using bench mark information from the shop drawings or architectural drawings. The subsill protrudes 1/4" to the exterior of the exterior face of the frame. Locate this line based on the bench mark information, and snap a chalk line to follow when installing the subsill. The subsill exterior angled leg should follow the chalk line for correct installation.

STEP 5) PREPARING AND SEALING THE SUBSILL FOR INSTALLATION

Regardless of whether an end dam is used or not, the subsill must be sealed to the condition to create a watertight condition when it is installed. Begin the process by cleaning the bottom of the subsill with a degreasing solution and wipe it dry after all foreign material has been removed. When the subsill is clean and dry, apply a generous amount of 795 silicone or equivalent silicone type sealant to the areas shown in figures 24 and 25 on page 22. This should be done just prior to the installation of the subsill to prevent the sealant from setting up before the subsill is installed.

SECTION VII - SUBSILL FABRICATION & INSTALLATION (CONT.)

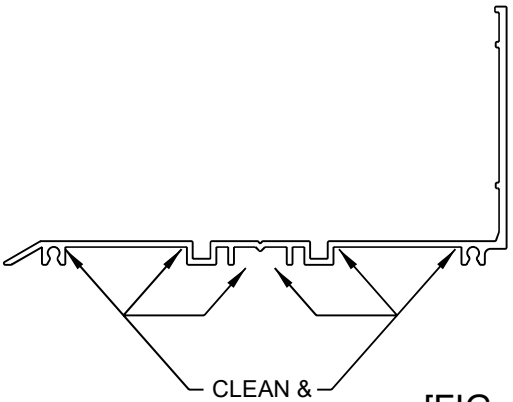

[FIG. 24]

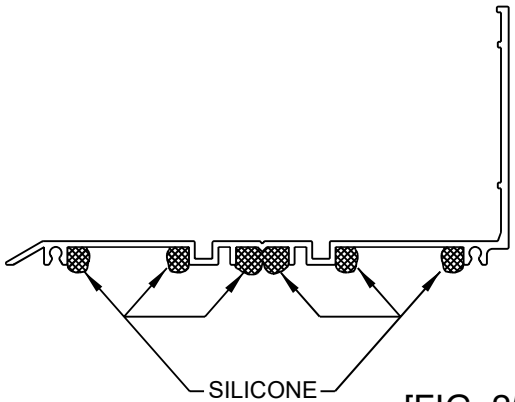

[FIG. 25]

STEP 6) ANCHORAGE OF THE SUBSILL

After the subsill has been cleaned and the 795 sealant has been applied, rotate the subsill into position and follow the chalk line location marks. Firmly press the subsill into position so that the sealant is pressed uniformly onto the condition. Locate anchors on the "V" groove of the subsill and tighten firmly and uniformly to anchor the subsill. Anchors should be placed 6" from each end and 16" on center. Seal and tool the anchor heads with 795 or equivalent silicone type sealant. These are general anchor location guidelines. Size, space, and embedment of anchors as required to meet structural loads.

[FIG. 26]

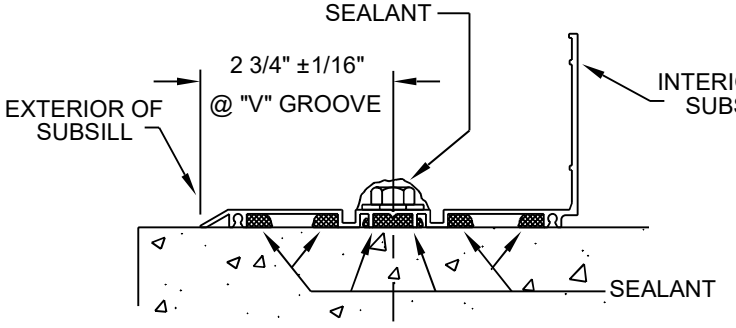

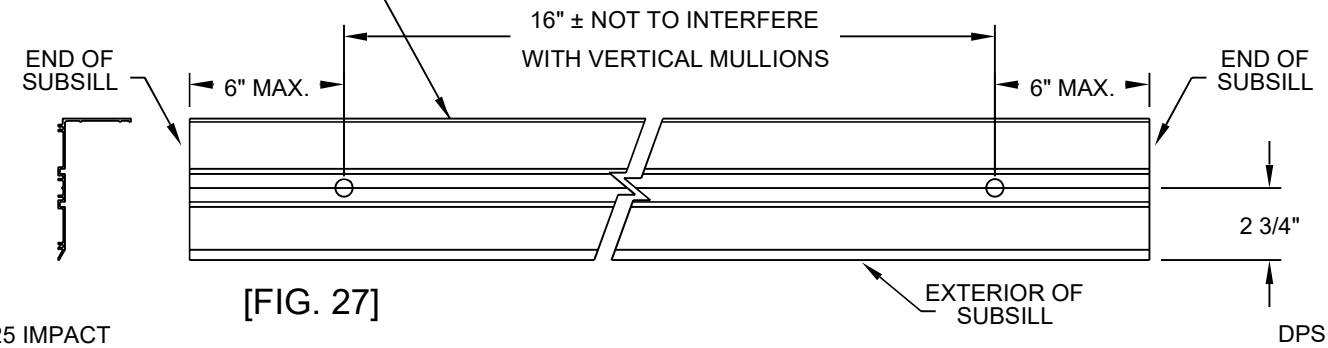

[FIG. 27]

SECTION VII - SUBSILL FABRICATION & INSTALLATION (CONT.)

STEP 7) SEALING THE ENDS OF THE SUBSILL

After the subsill has been installed and anchored, it must be sealed to the condition at each end with 795 or equivalent silicone type sealant. If the subsill has an end dam, there should be a continuous bead of 795 placed up both the interior and exterior and across the top edges of the end dam where it meets the condition. The sealant should be tooled to make a watertight seal between the end dam and the condition.
If the subsill does not have an end dam, a continuous bead of silicone type sealant must be applied to the end of the subsill where it meets the condition. The sealant should be tooled to make a watertight seal between the subsill and the condition.
See figures 28 and 29 below for sealant application.

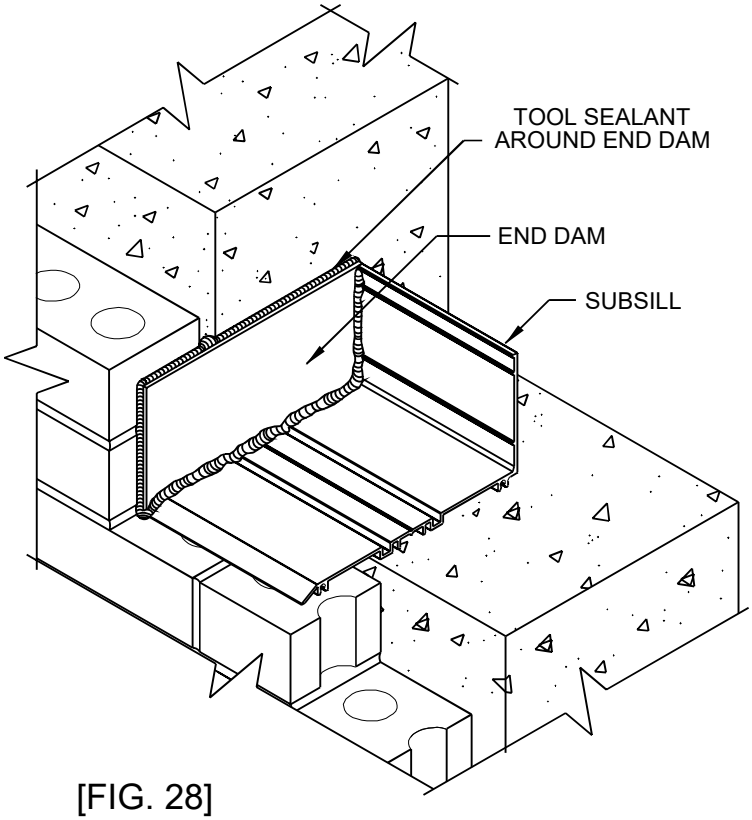

[FIG. 28]

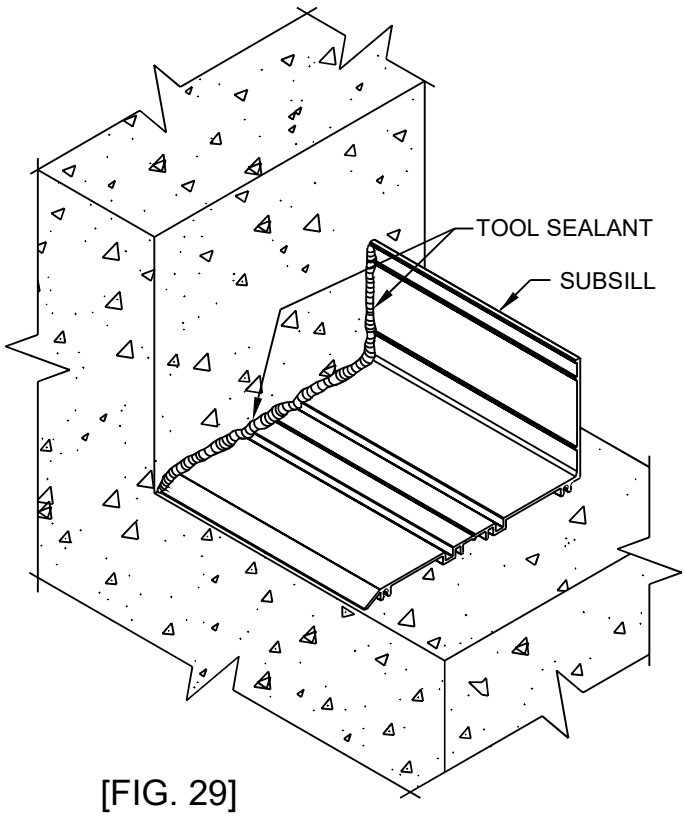

[FIG. 29]

SECTION VII - SUBSILL FABRICATION & INSTALLATION (CONT.)

STEP 8) SPLICING THE SUBSILL

Verify that the subsills have been installed according to instructions on pages 20-23. Splice areas should be centered at the vertical mullion only. Maximum subsill length between splices is 20 feet ±. If a splice is required, leave a 1/4" gap between the subsill ends centered on a vertical mullion location. Use 795 or equivalent silicone type sealant and a strip of, WM01, bond breaker tape 2" wide and approximately 7 1/2" long to create the splice material. Apply the 795 to both sides of the subsill ends, and fill the void between the subsills from the exterior to the interior at the condition and fill the sill leg receptor cavities on both subsills to a width of 2". Ensure that the bond breaker tape is centered over the 1/4" gap, and set the bond breaker tape into the sealant. Tool the 795 over the bond breaker tape to create a watertight seal. If more sealant is required to cover the edges of the bond breaker tape, apply the required amount. Ensure that the splice joint does not interfere with anchor legs of the sill or the leg receptors of the subsill. This is done by making sure the splice joint is located at the center of a vertical mullion. Refer to the shop drawings or architectural drawings for mullion center lines.

[FIG. 30]

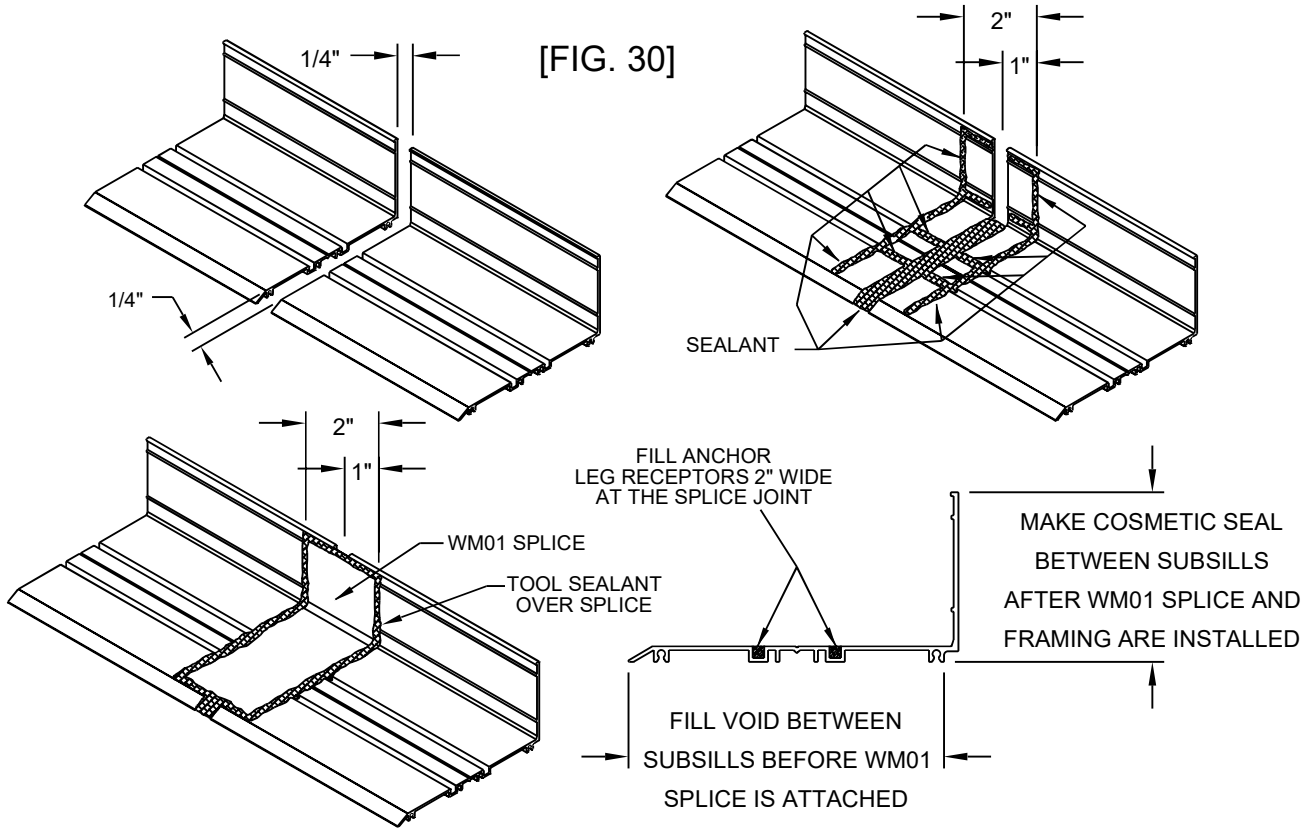

SECTION VIII-FRAME INSTALLATION

A. SCREW SPLINE

STEP 1) APPLYING SEALANT TO SUBSILL FOR FRAME INSTALLATION

Apply 795 or equivalent silicone type sealant to the areas shown in figure 31 below.
Do not apply sealant to the sill anchor leg receptor area. Excessive sealant at this area may cause the system to lift up above the subsill and not seat correctly.

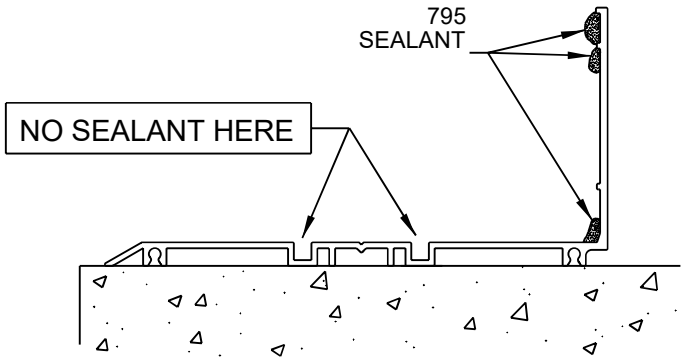

[FIG. 31]

Ensure that enough 795 has been applied to seal the areas shown in figure 32 below. After the frame has been installed, wipe off all excess sealant that squeezes out.
795 sealant should only be applied to the subsill immediately prior to the installation of the frame modules.

[FIG. 32]

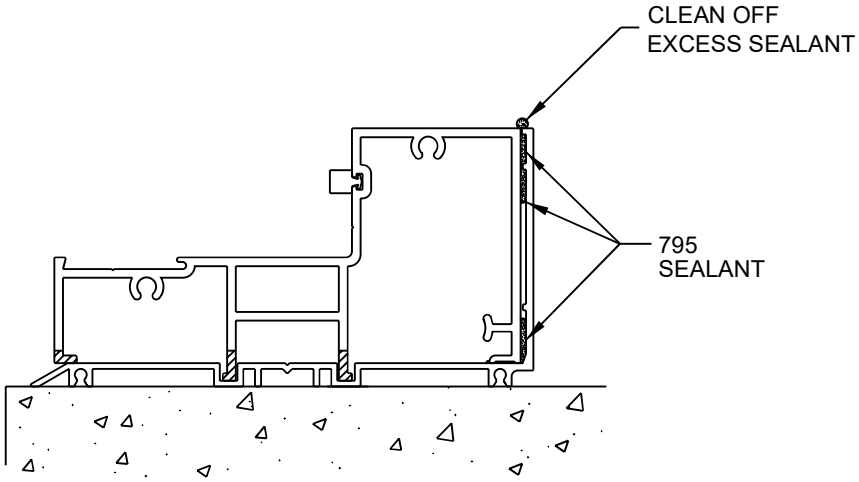

SECTION VIII-FRAME INSTALLATION (CONT.)

A. SCREW SPLINE

STEP 2) INSTALLING JAMB MODULE FOR SCREW SPLINE FRAMES

Place the module on the subsill at an approximate 30˚ angle. While applying pressure upward, rotate the module into the condition. See figure 32 on page 25 for sill placement into the subsill. When rotated correctly, the interior face of the sill should be flush against the interior leg of the subsill and the sill should set flat into the subsill as shown in figure 32 on page 25.

[FIG. 33]

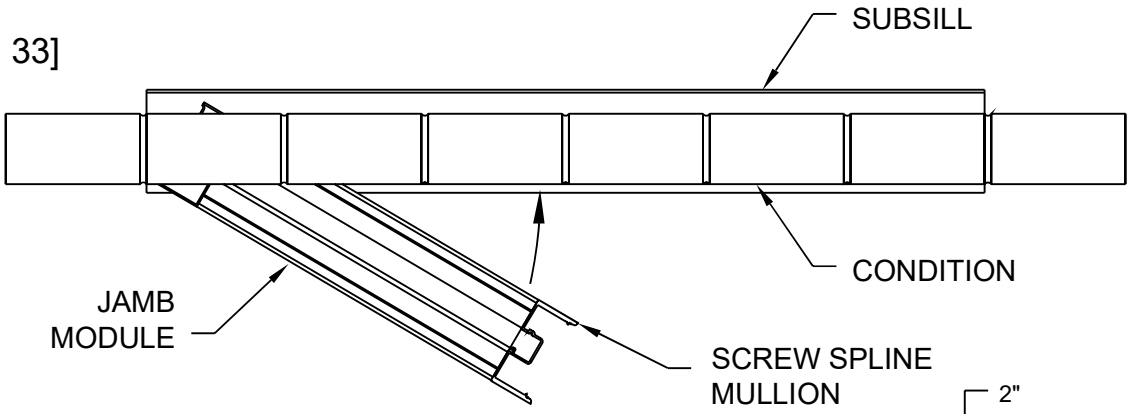

STEP 3) ANCHORING THE JAMB

Ensure that the frame jamb is true and plumb. Anchor through the jamb and into the condition as shown in figures 34 and 35 below.

These are general anchor location guidelines. Size, space, and embedment of anchors as required to meet structural loads.

[FIG. 34]

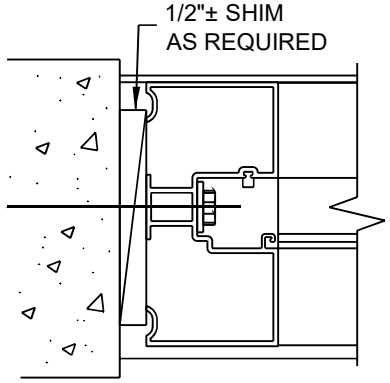

[FIG. 35]

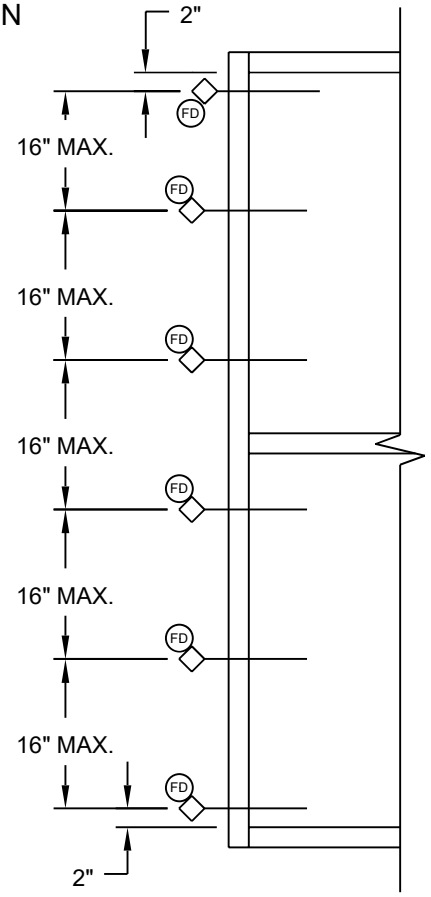

SECTION VIII-FRAME INSTALLATION (CONT.)

A. SCREW SPLINE

STEP 4) ANCHORING THE HEAD

For D.L.O.'s 22" and narrower, the anchors must be spaced 2" from the jamb and vertical members. Also another anchor 4" from the intermediate vertical is required. For D.L.O.'s wider than 22", the outside anchors must be spaced in a similar manner and all center anchors must be located at 16" on center Maximum. See figures 36 and 37 below for anchor placement. These are general anchor location guidelines. Size, space, and embedment of anchors as required to meet structural load.

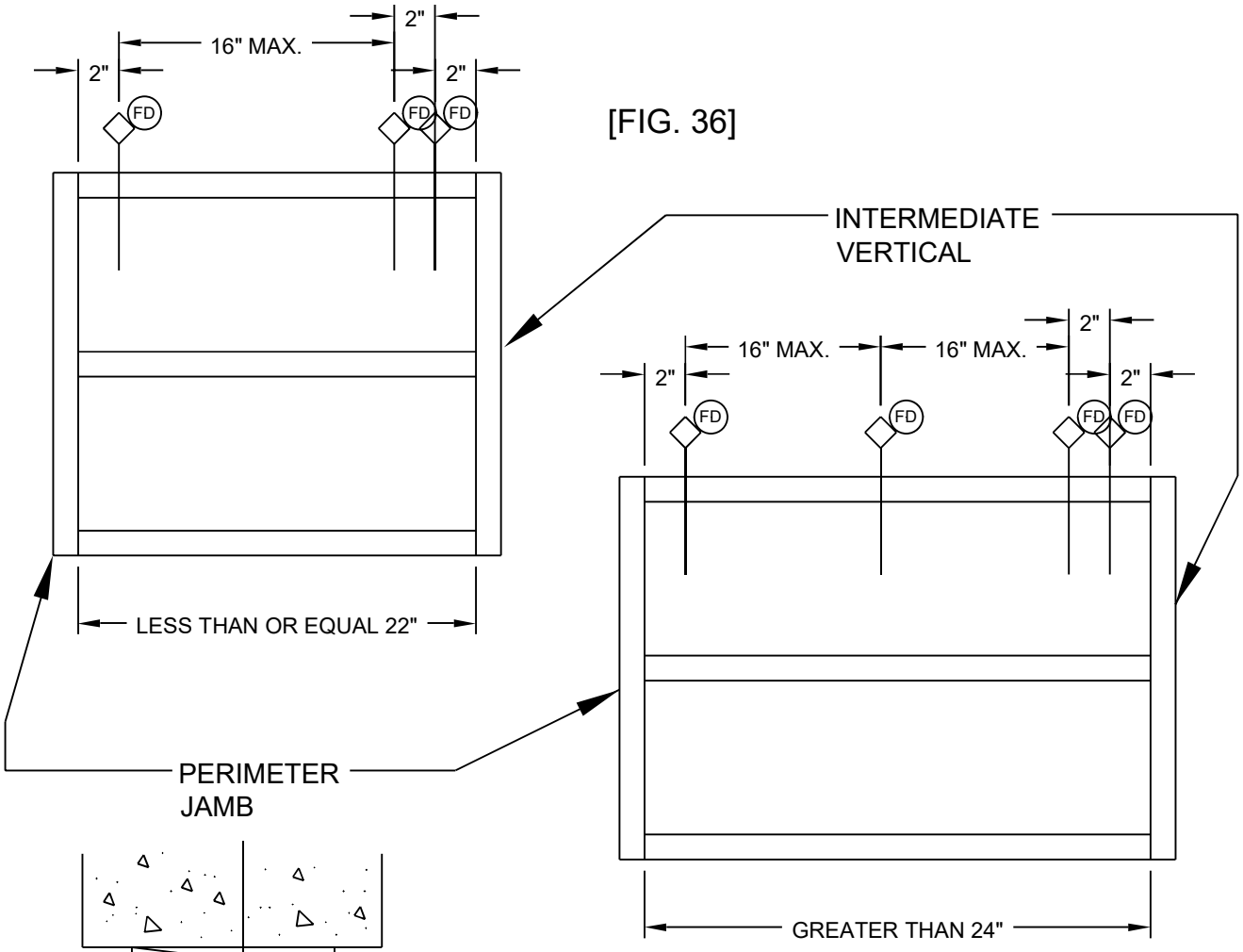

[FIG. 36]

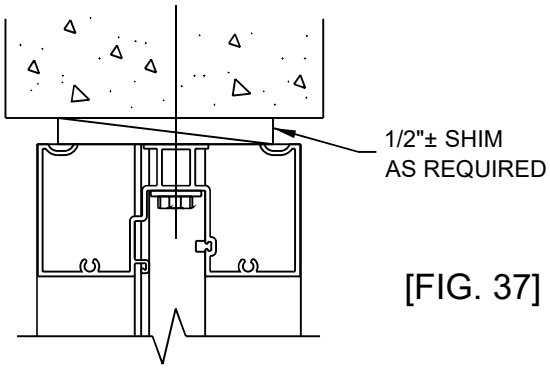

[FIG. 37]

SECTION VIII-FRAME INSTALLATION (CONT.)

A. SCREW SPLINE

STEP 5) SEALING SCREW SPLINE VERTICAL MULLIONS

Prior to installing an intermediate vertical mullion or perimeter jamb, apply 795 or equivalent silicone type sealant to the vertical mullion in the location shown in figure 38 below. Both sides of the entire mullion should be sealed. Apply enough sealant so when the filler or opposite mullion half is snapped, it will create a good seal. Wipe off excess sealant from the exterior if required. This sealant practice should be used for screw spline vertical mullions only.

[FIG. 38]

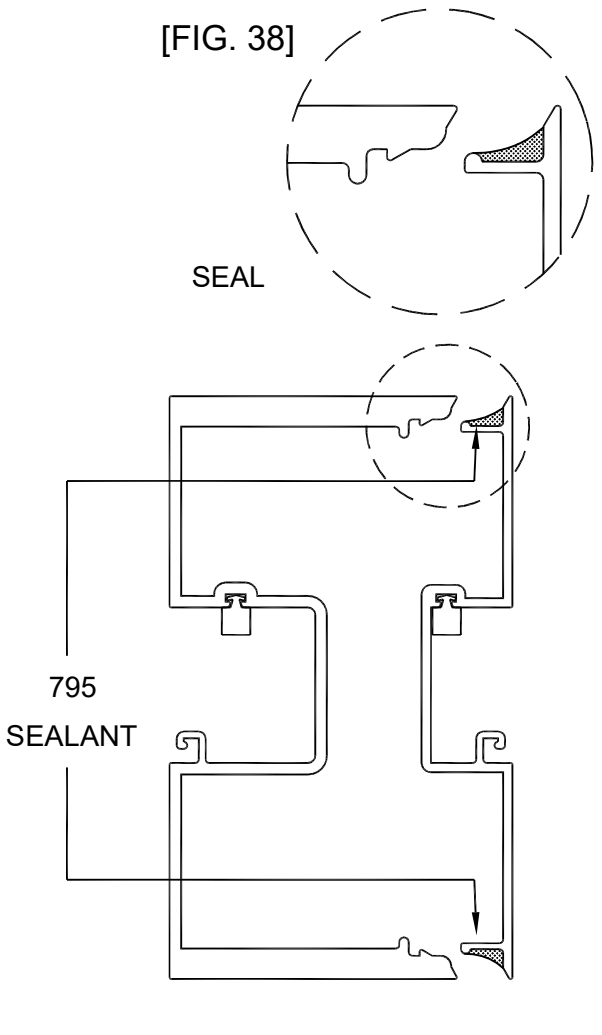

[FIG. 39]

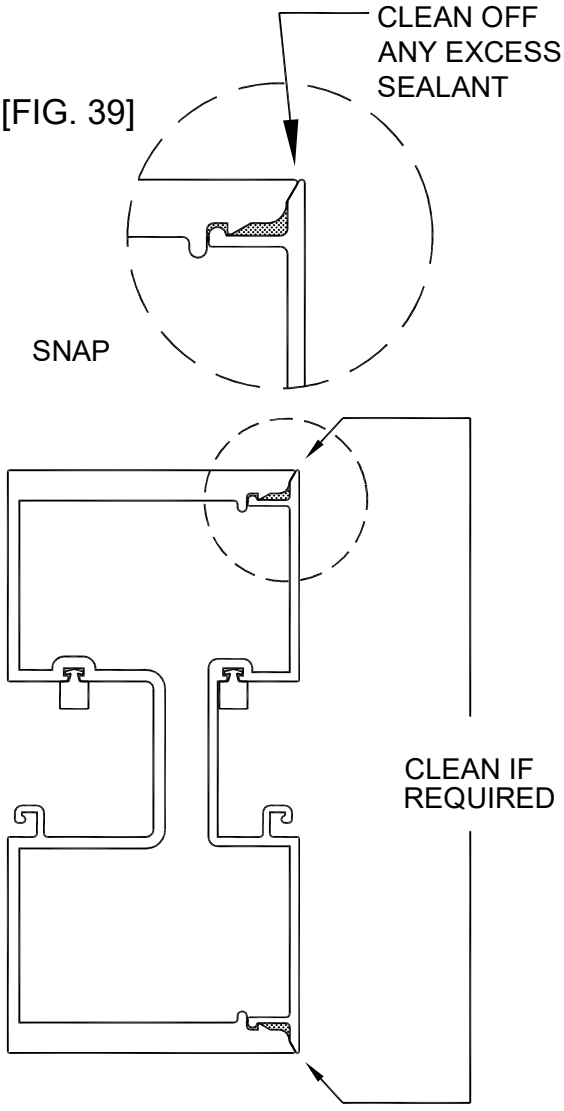

SECTION VIII-FRAME INSTALLATION (CONT.)

A. SCREW SPLINE

STEP 6) INSTALLING SUBSEQUENT SCREW SPLINE MODULES

Make sure that the anchors are installed into the head and jamb of the first module as specified in figures 34-37 on page 26 and 27. The 795 sealant should be applied to the mullion and to the subsill as specified in figure 31 on page 25 and in figures 38 and 39 on page 28. Place the second module on the subsill at an approximate 30 degree angle. Rotate the module into the condition approximately 1/4" away from the previously installed module. Once the second module is in place 1/4" from the first module, slide it into position and begin snapping the mullion halves together. When the two mullion halves are fully snapped, press the second mullion down onto the subsill to make the sill flush with the top of the subsill as shown in figure 32 on page 25. See figures 42 and 43 on page 30 for mullion snap fit instructions.

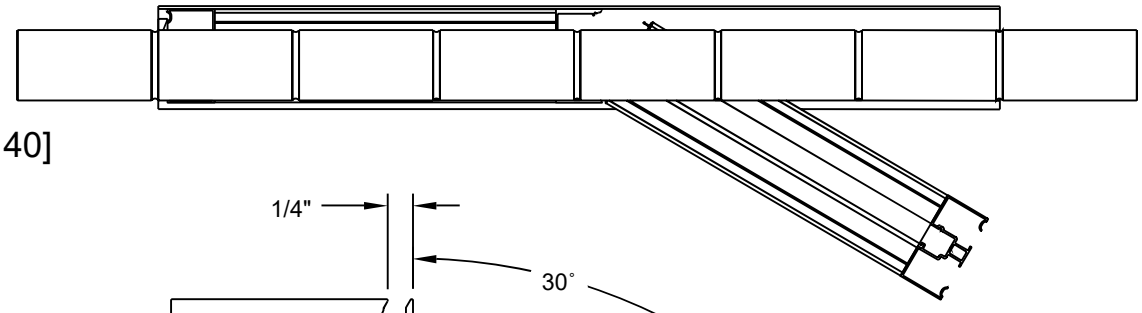

[FIG. 40]

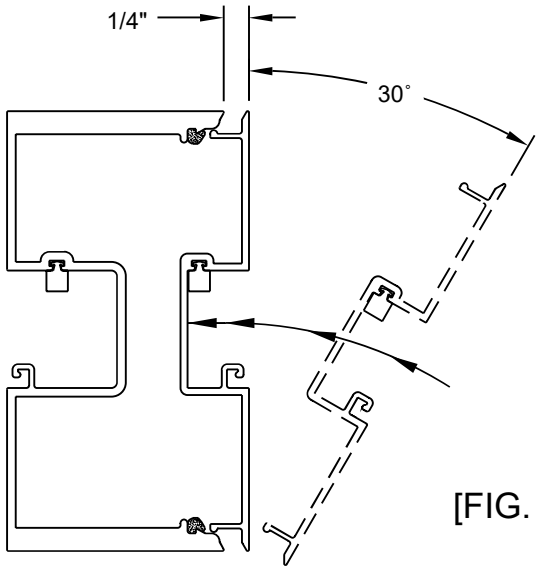

[FIG. 41]

SECTION VIII-FRAME INSTALLATION (CONT.)

A. SCREW SPLINE

STEP 7) SNAPPING SCREW SPLINE VERTICAL MULLIONS TOGETHER

In some cases it may be necessary to use a clamping device to get the mullions together properly, if they cannot be snapped by hand. To do this, place one clamp at the bottom of the mullions using wood blocks to protect the extrusions. Tighten the clamp until the mullion halves begin to snap together. Place another set of wood blocks and a clamp at the middle of the mullions and tighten it. Then repeat the same process at the top. Tighten the clamps until the mullion halves are pressed together. The sight line should be 2 1/2". It may be necessary to work from one clamp to the next several times, or move the clamps to ensure the mullions are snapped together evenly. DO NOT try to hammer the mullion halves together! This will dent, bend, scratch, or deform the mullions and may cause them to leak. Ensure that the previous module is fully anchored before installing the 2nd module.

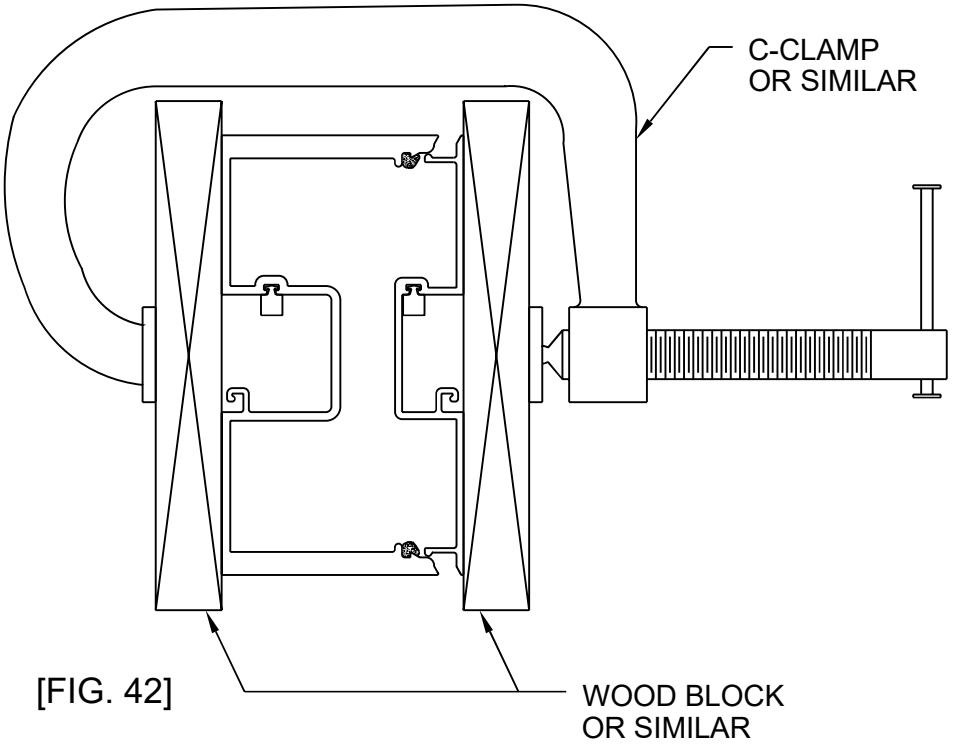

[FIG. 42]

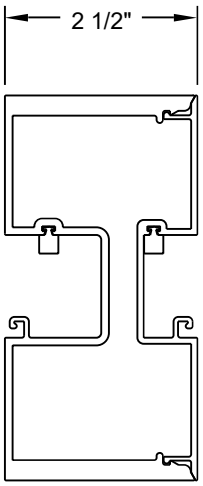

[FIG. 43]

SECTION VIII-FRAME INSTALLATION (CONT.)

A. SCREW SPLINE

STEP 8) ANCHORING SUBSEQUENT SCREW SPLINE MODULES

After the mullion halves are snapped correctly, ensure that the mullions are plumb and true, and anchor the head as shown on page 27. If this is the last module in a run, ensure that the mullion halves are snapped correctly and install the required shims between the jamb and condition. Install the head and jamb anchors as shown on pages 26 and 27. Ensure that the jamb anchors do not separate the last module from the previous. It may be necessary to shim tightly against the condition to prevent this. Seal and tool all anchor heads with 795 or equivalent silicone type sealant.

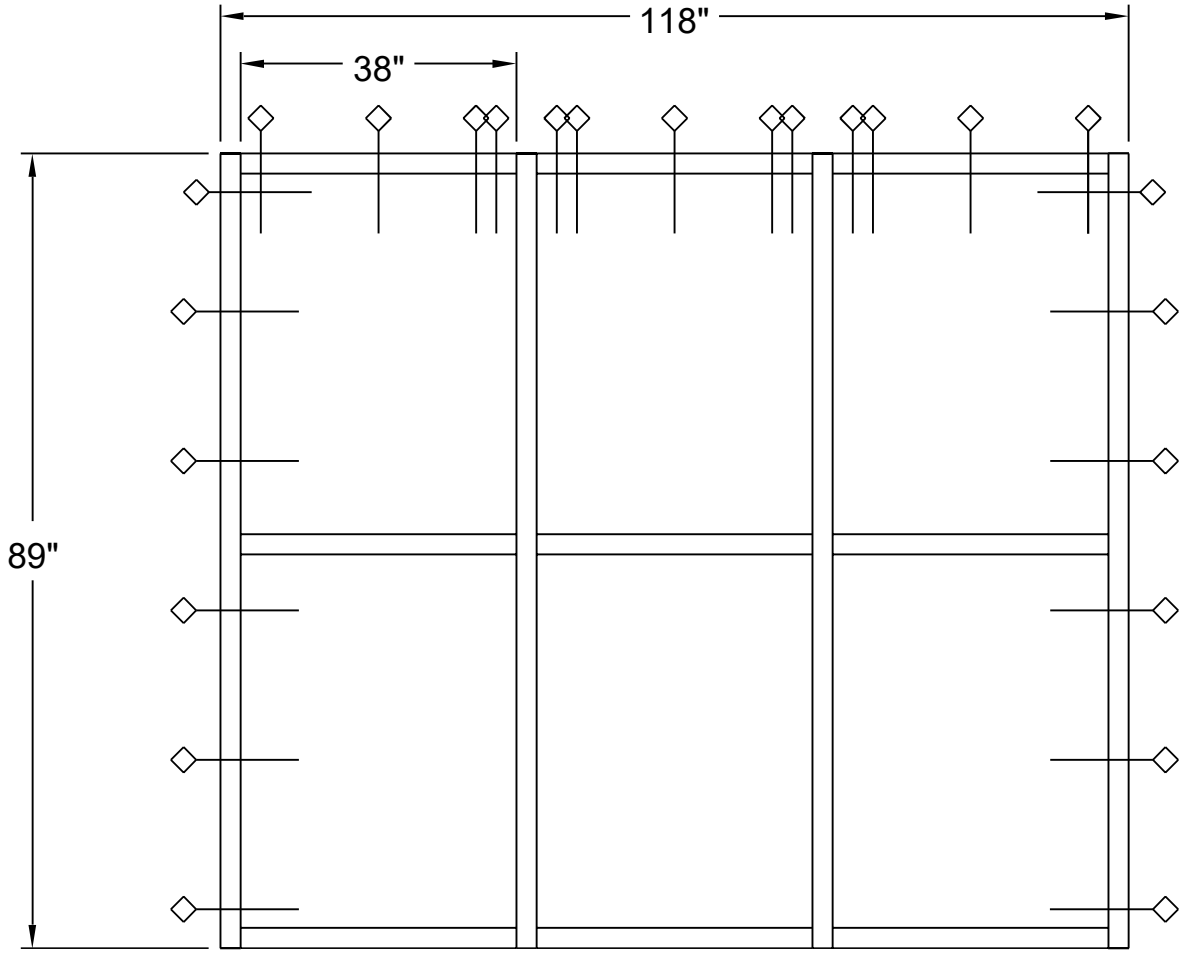

TYPICAL ELEVATION WITH ANCHOR LOCATIONS

[FIG. 44]

SECTION VIII-FRAME INSTALLATION (CONT.)

B. SHEAR BLOCK

STEP 1) INSTALLING SHEAR BLOCK FRAMES

Because of the design of the shear blocks for the 525 system, EFCO recommends that the shear block framing be used in punched openings only. It would be possible to stack modules side by side in a longer run. However, the last module could not be installed without an extremely large caulk joint at the jamb of the last module installed. For this reason, the shear block framing system should be used for openings where the frame can be fully assembled and positioned into the opening as a single unit.

STEP 2) SHEAR BLOCK FRAME ASSEMBLY

Begin the installation process by assembling the shear block framing as shown in figure 11 on page 14. Once the unit has been assembled, position the unit to the exterior of the subsill. Ensure that the subsill has been installed and sealed correctly according to the instructions on pages 20-25.

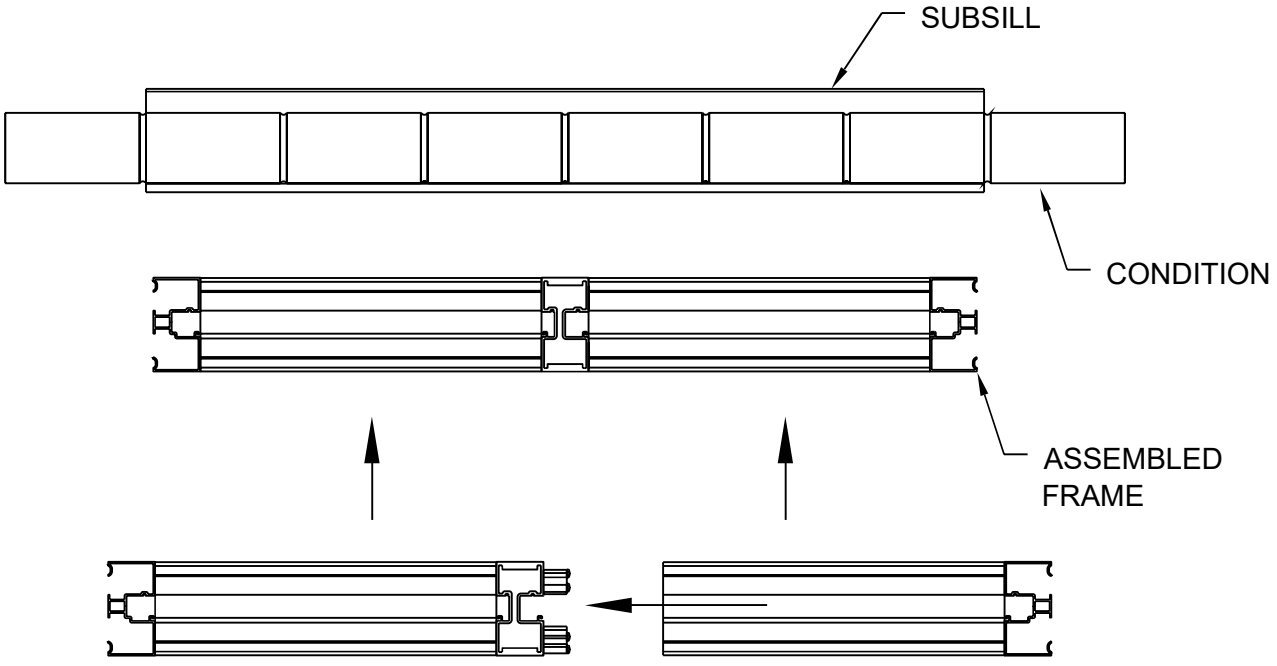

[FIG. 45]

SECTION VIII-FRAME INSTALLATION (CONT.)

B. SHEAR BLOCK

STEP 3) INSTALLING SHEAR BLOCK FRAMES

The frame should be supported at each vertical member to ensure the shear block joints are not over stressed. Begin the installation by evenly lifting and supporting the frame so that the bottom of the sill is slightly higher than the top of the subsill. With even pressure, push the frame into the rough opening. Once the frame is in the correct position, allow the weight of the system to settle onto the subsill. Additional weight may be required to press the sill down even with the top of the subsill. Ensure that the frame is centered evenly in the rough opening.

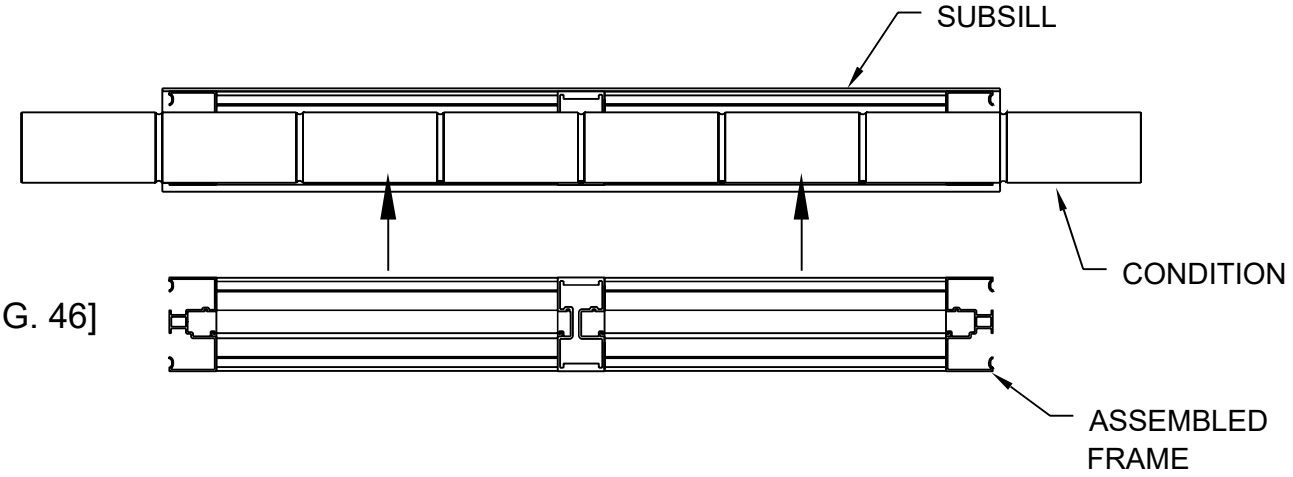

[FIG. 46]

STEP 4) ANCHORING SHEAR BLOCK FRAMES

Once the frame is installed into the rough opening, ensure that it is true and plumb. Anchor locations for the shear block frame will be the same as for the screw spline frame. Follow the instructions as shown in figures 34-37 on pages 26 and 27 for proper spacing of the anchors. It may be advantageous to anchor perimeter jambs first and heads second to ensure the correct line of the frame is maintained. Seal and tool all anchor heads with 795 or equivalent silicone type sealant. These are general anchor location guidelines. Size, space, and embedment of anchors as required to meet structural load.

SECTION VIII-FRAME INSTALLATION (CONT.)

C. PERIMETER SEALANT

STEP 1) PERIMETER FRAME SEALANT

All portions of the frame and surrounding conditions where sealant will be applied should be cleaned and prepped per the sealant manufacturer's recommendations. Use 795 or equivalent silicone type sealant to create the perimeter seal of the system at both exterior and interior perimeters. Exterior and interior seals are required for air and water performance. Begin by pushing caulk backer rod into position around the full perimeter of the frame at the head and jambs. Push the backer rod into the gap between the frame and condition so it sets below the frame edge. See figures 47 and 48 below for backer rod placement. The 795 sealant should be applied by a skilled tradesman to ensure proper seal and appearance. See figures 49 and 50 below for sealant application.

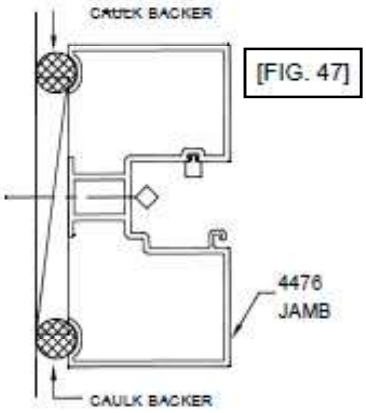

[FIG. 47]

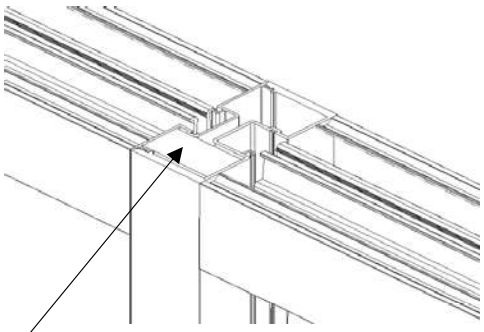

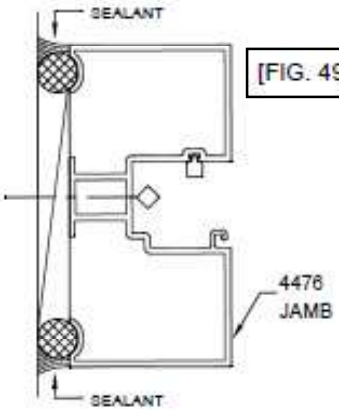

[FIG. 49]

All open-ended vertical frame members must be closed off before installing the frame into the building opening. Insert a foam plug (N.B.E.) into the top of the mullion at the exterior side of the system. Make sure that the top of the plug is flush with the top of the vertical mullion in order to keep the exterior perimeter joint seal continuous

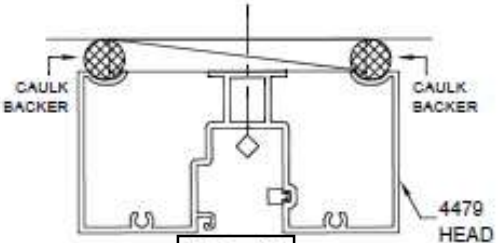

[FIG. 48]

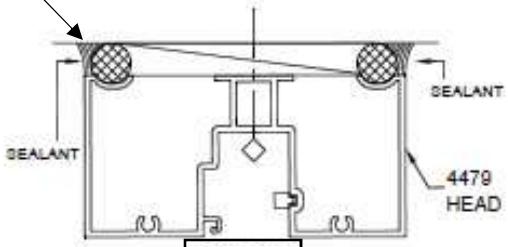

[FIG. 50]

SECTION IX - GLAZING

STEP 1) IDENTIFICATION OF SETTING BLOCKS FOR HORIZONTALS

The setting block for standard frame horizontals is HN43. Two setting blocks per D.L.O. are required and should be placed at 1/4 points or 1/8 points depending on dead load requirements. Door headers require the use of a HN91 setting block. Two per D.L.O. are also required for the HN91. Depending on dead load requirements, the setting blocks should be placed at 1/4 or 1/8 points. See figures 56-58 on page 36 for calculating 1/4 and 1/8 point locations.

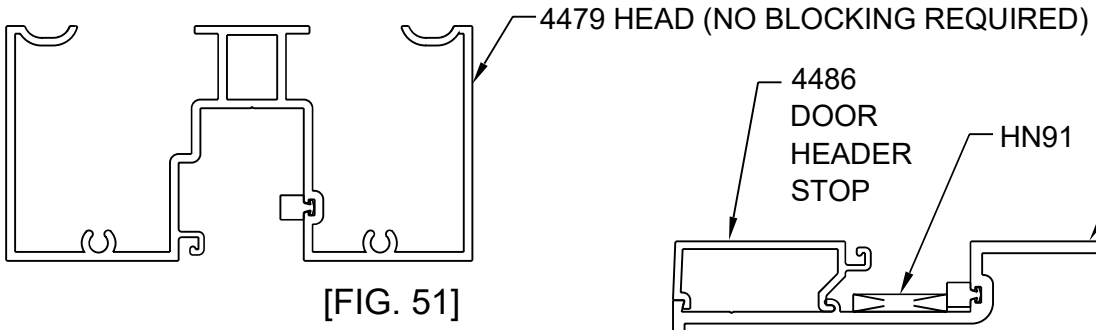

[FIG. 51]

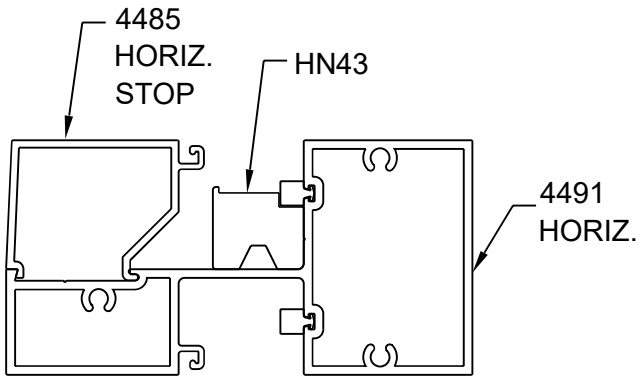

[FIG. 52]

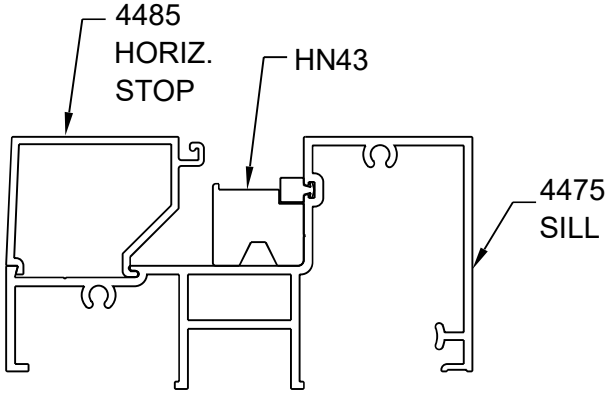

[FIG. 53]

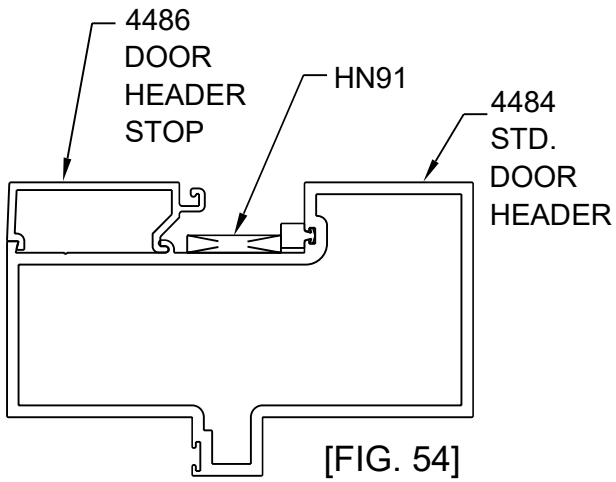

[FIG. 54]

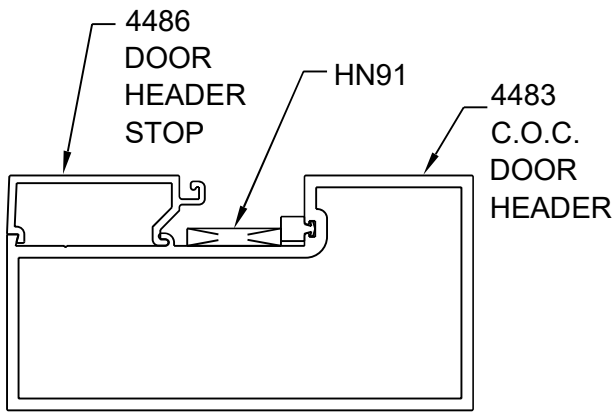

[FIG. 55]

SECTION IX - GLAZING (CONT.)

STEP 2) SETTING BLOCK LOCATIONS

Depending on the size and configuration of each DLO, the glass setting blocks must be placed to give the best support of the glass without adding dead load weight to deflect the horizontal. Figure 56 below shows typical 1/4 point and 1/8 point setting block locations. Contact EFCO Structural Engineering for blocking requirements other than 1/4 and 1/8 points.

[FIG. 56]

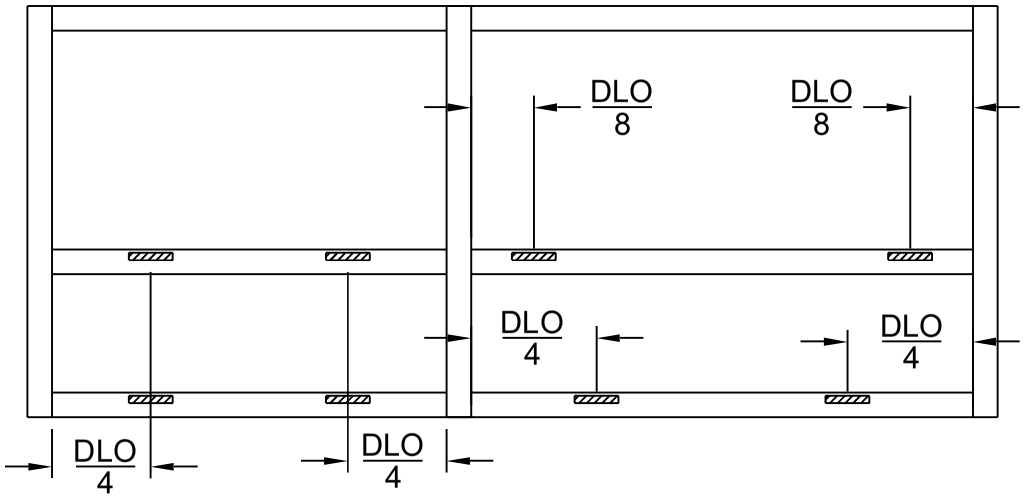

Setting block locations should be determined by following the Dead Load Charts shown in figures 57 and 58 below. These charts are for general reference only and refer to laminated glass constructed from (2) 1/4" glass panes and laminate material. If the glass size you require falls outside the parameters of these charts or if your glass is not constructed from (2) 1/4" panes of glass and laminate material, please contact EFCO Structural Engineering.

[FIG. 57]

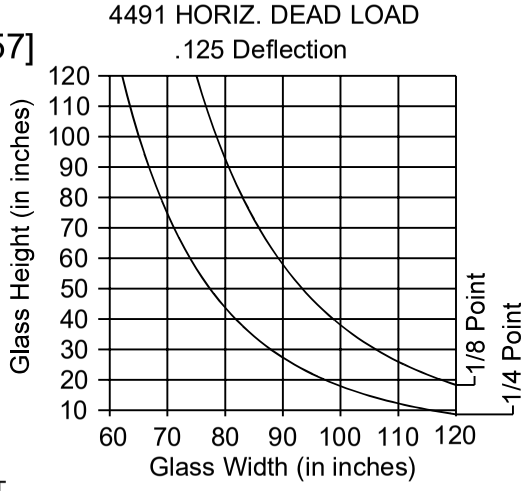

[FIG. 58]

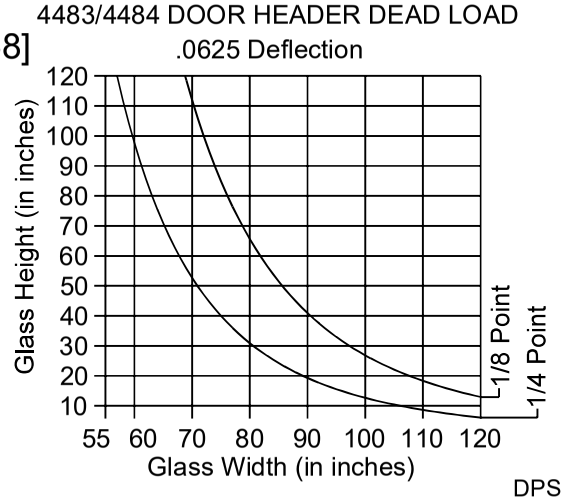

SECTION IX - GLAZING (CONT.)

STEP 3) GLAZING POCKET IDENTIFICATION IN VERTICALS

As instructed in figures 10 and 11 on pages 13 and 14, ensure that each vertical DLO has at least one DEEP glass pocket on either side. It is necessary for the glazing installation that a deep pocket be used to load the glazing units. One exception is the applied transom glazing stops. The applied stops do not require the glass to be loaded into a deep pocket. These details are shown with the deep glazing pockets shown right justified for viewing clarity.

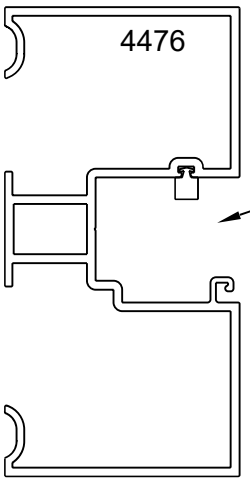

[FIG. 59]

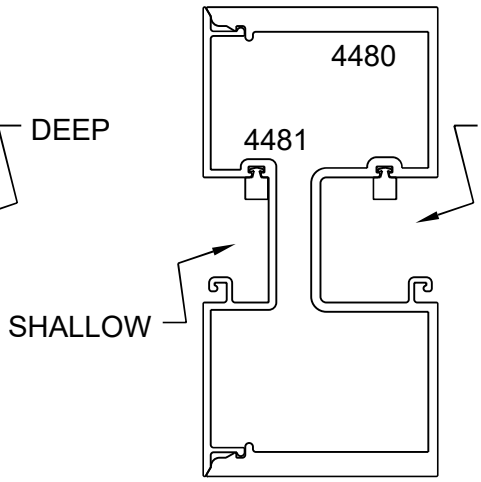

[FIG. 60]

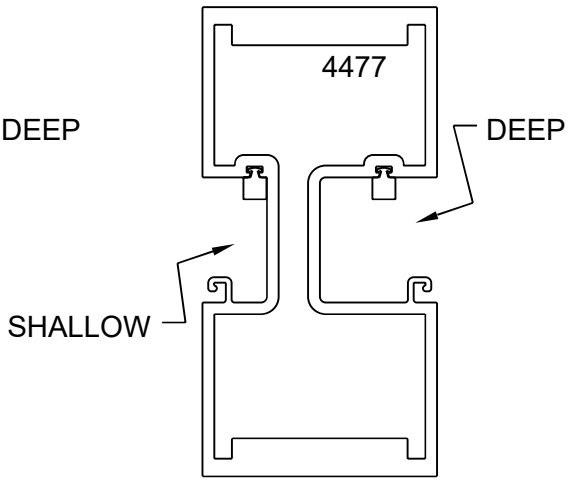

[FIG. 61]

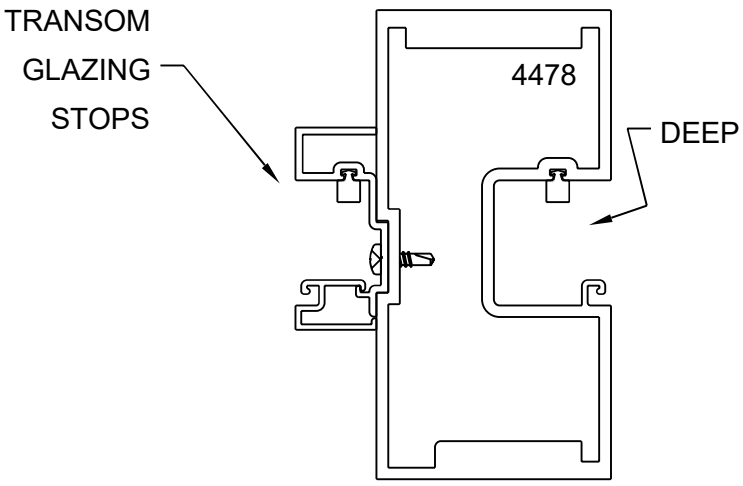

[FIG. 62]

SECTION IX - GLAZING (CONT.)

STEP 4) GLASS SIZE FORMULAS AND GLASS BITE

Glass size formulas are DLO + 1 1/8" for both horizontal and vertical DLO's. Glass bite for all glazing is 9/16". See figures 63-65 below for glass size and bite.

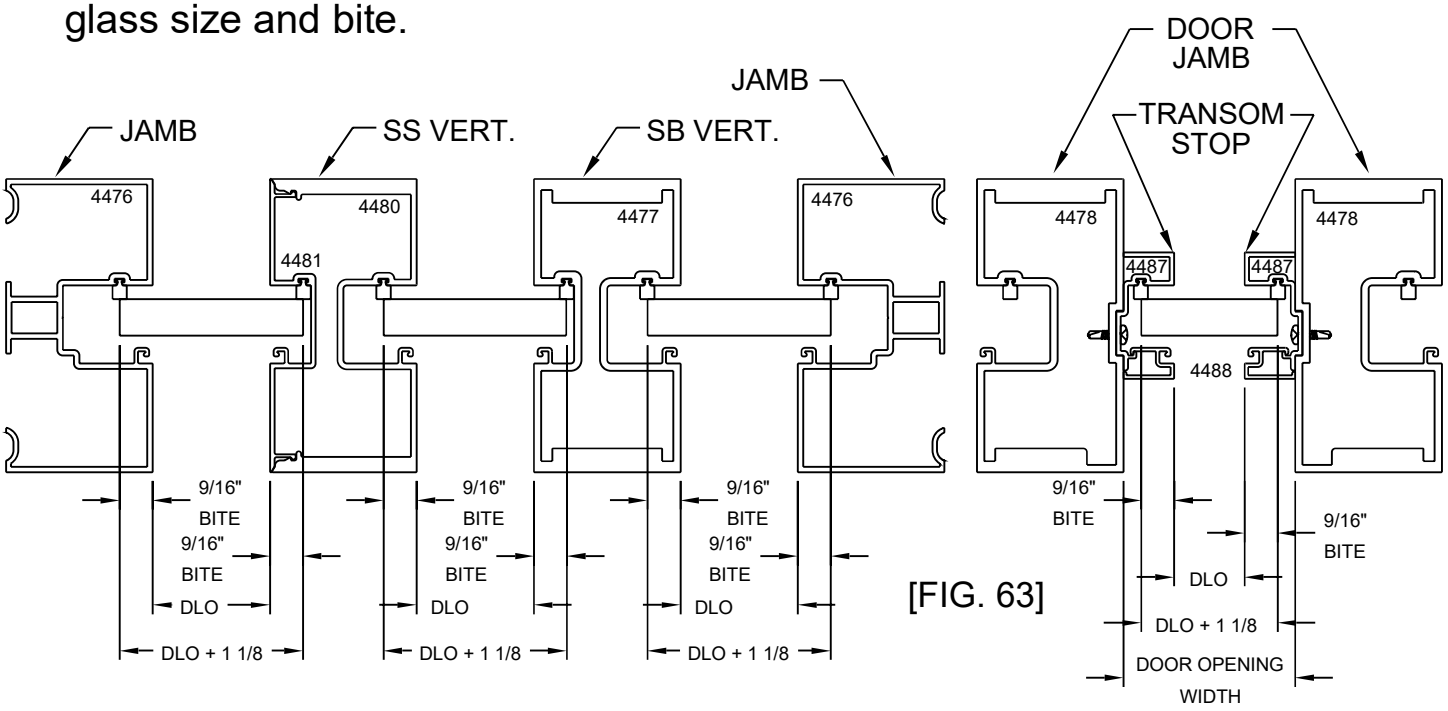

[FIG. 63]

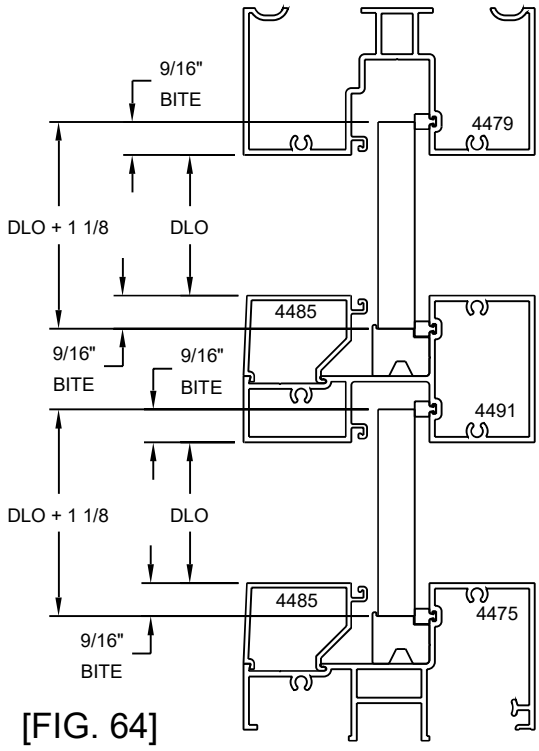

[FIG. 64]

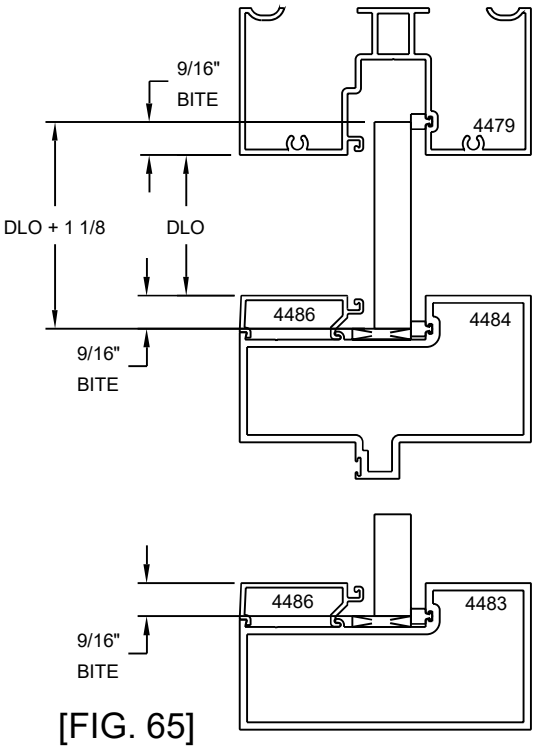

[FIG. 65]

STEP 5) INSTALLING THE FW39 WATER DEFLECTOR

Install the FW39 at the ends of the intermediate horizontals only. It is not required at heads or sills. Use 795 or equivalent silicone type sealant to adhere the FW39 onto the intermediate horizontal. Ensure that the FW39 fits flush with the top of the intermediate horizontal glazing pocket, and smooth any excess 795 sealant so water will flow easily over the water deflector. See typical installation of the FW39 in figures 67 and 68 below.

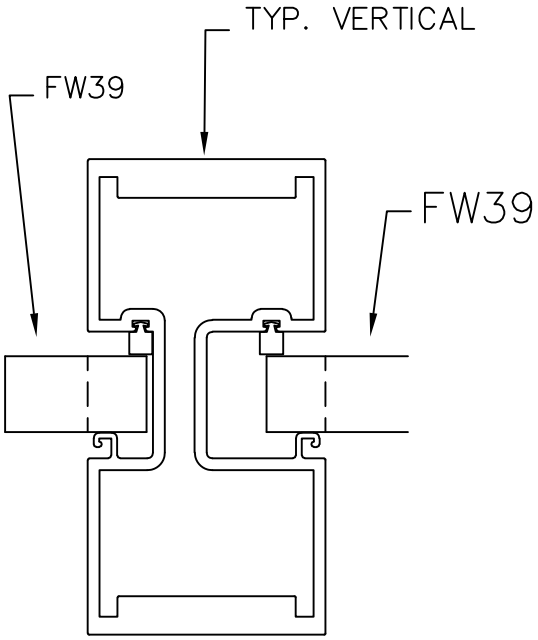

[FIG. 67]

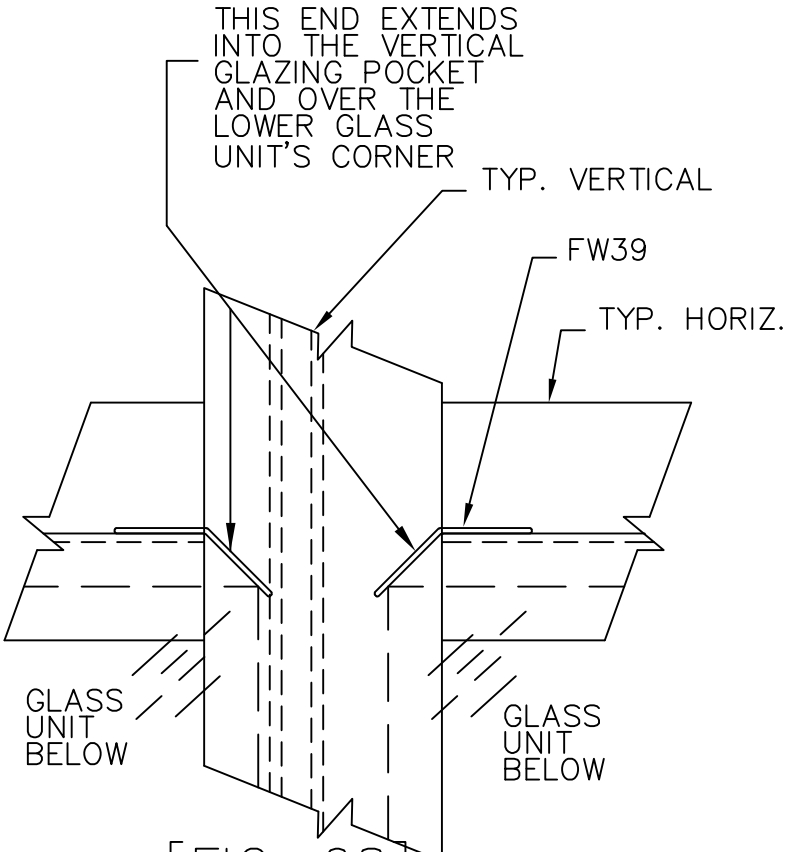

[FIG. 68]

SECTION IX – GLAZING (CONT.)

STEP 6) GLASS INSTALLATION

A) Make sure that the FW39 is installed per the instructions in figures 66–68 on page 39.
B) Position the glass on the exterior of the frame without the removable glass stop installed. Shift the glass into the deep pocket to begin the installation.
C) Swing the opposite edge of the glass around to align the glass with the glazing pocket.
D) Slide the glass into the shallow glazing pocket so that an equal amount of glass bite is on each side of the DLO.
E) Lift the glass straight up into the head or horizontal, and insert the setting blocks at the predetermined 1/4 or 1/8 point locations. Lower the glass back down onto the setting blocks and ensure that the glass is still centered in the DLO. Ensure that the interior glazing gasket is not rolled out of the gasket track.
F) Snap on the removable glass stop and install the exterior glazing gasket. See figure 71 on page 41 for exterior gasket installation.
See figures 69 and 70 below for glass installation.

[FIG. 69]

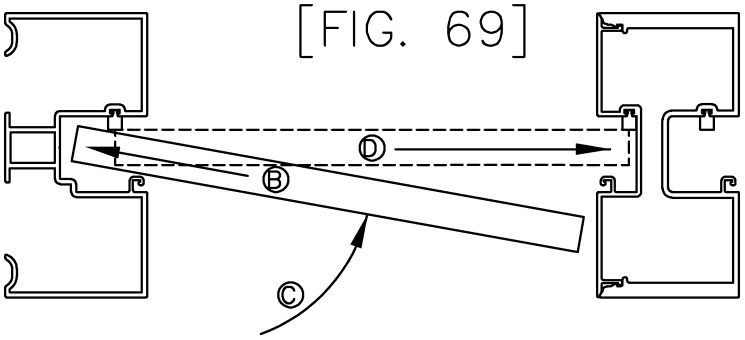

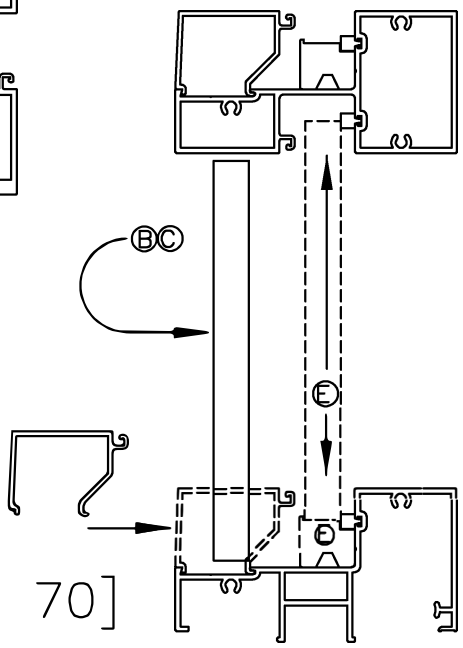

[FIG. 70]

SECTION IX – GLAZING (CONT.)

STEP 7) EXTERIOR GLAZING GASKET INSTALLATION

Ensure that the glass, setting blocks, and snap in glazing bead have been installed according to the instructions in figures 69 and 70 on page 40. Begin by measuring the DLO width and height. Cut the exterior glazing gasket to length by using the following formula.

EXTERIOR GASKET LENGTH = DLO + 3.0"

To install the exterior gasket, start by pushing the precut gasket in place at the ends. Move to the middle, then to 1/4 points and work the "waves" toward the ends. Try to maintain 8" to 12" placement of the gasket to ease the installation.

[FIG. 71]

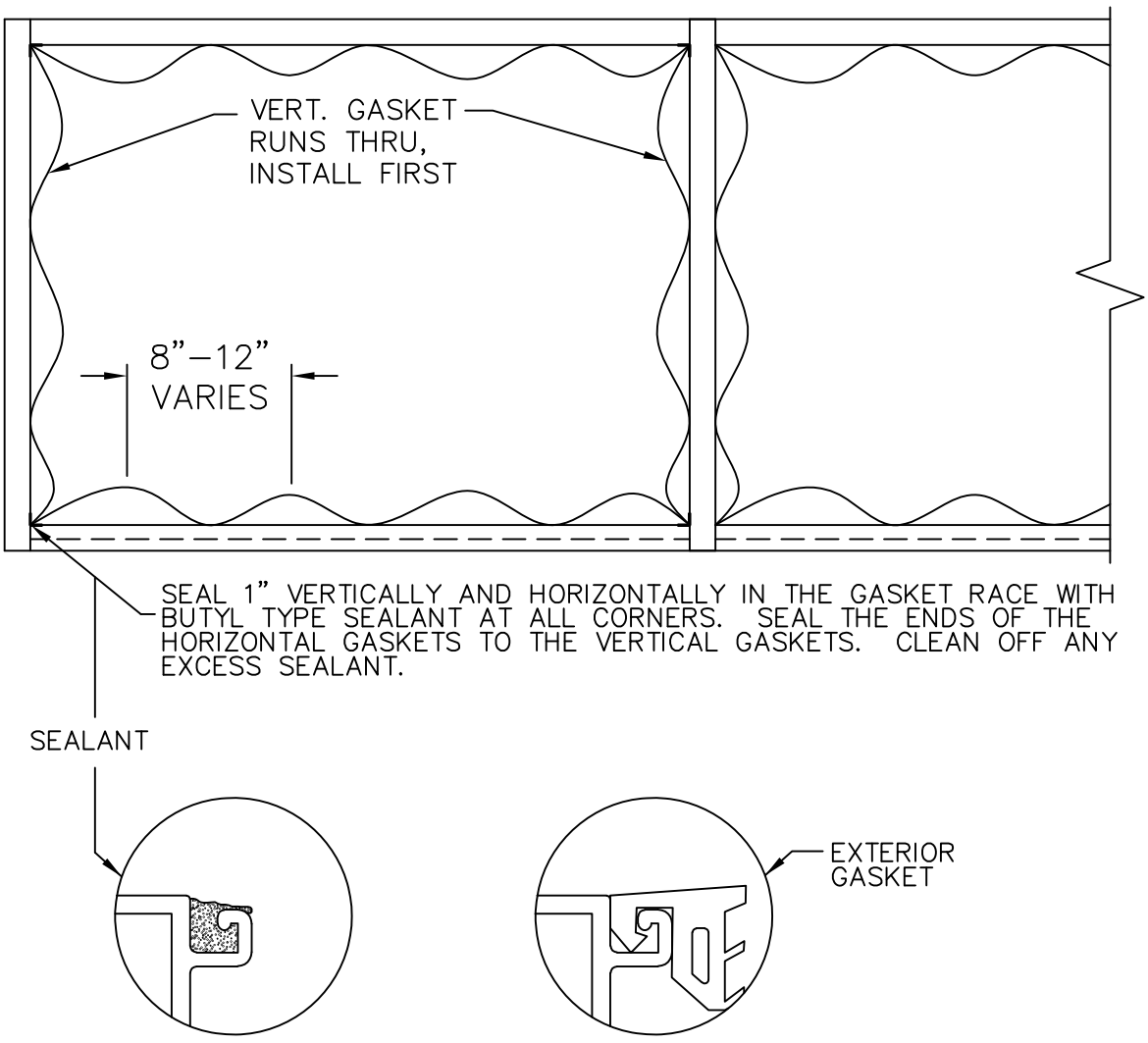

SECTION IX - GLAZING (CONT.)

STEP 8) INTERIOR GLASS SEALANT APPLICATION

Begin the interior glass sealant application by ensuring that the glass and metal are cleaned and dry per the sealant manufacturer's instructions. Apply sufficient Dow Corning 995 or equivalent structural silicone sealant to the gap between the glass and metal to fill the void back to the interior gasket on all sides of each DLO. Ensure that air pockets in the sealant are not present as this would create a weak area in the glass and metal adhesion. Tool the sealant flat against the metal for a clean cosmetic appearance. It may be beneficial to use a form of masking tape on the metal and/or glass to aid in the clean appearance of the seal and to lessen the clean-up effort. See figures 72 and 73 below for 995 sealant application.

[FIG. 72]

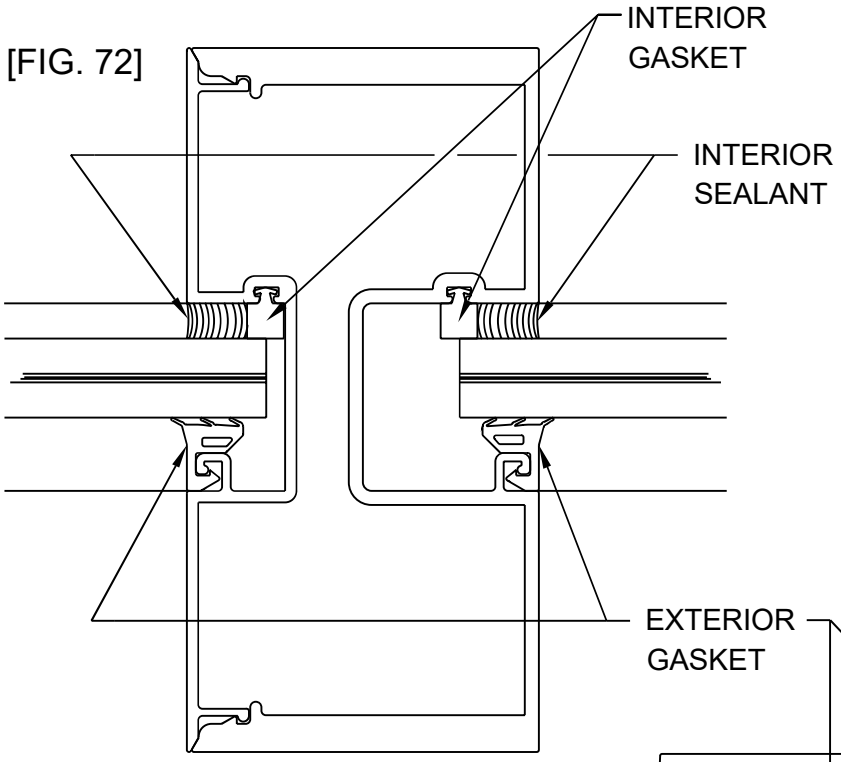

[FIG. 73]

