Alumicor™
BUILDING EXCELLENCE

TUBELITE®
DEPENDABLE
LEADERS IN ECO-EFFICIENT STOREFRONT, CURTAINWALL AND ENTRANCE SYSTEMS

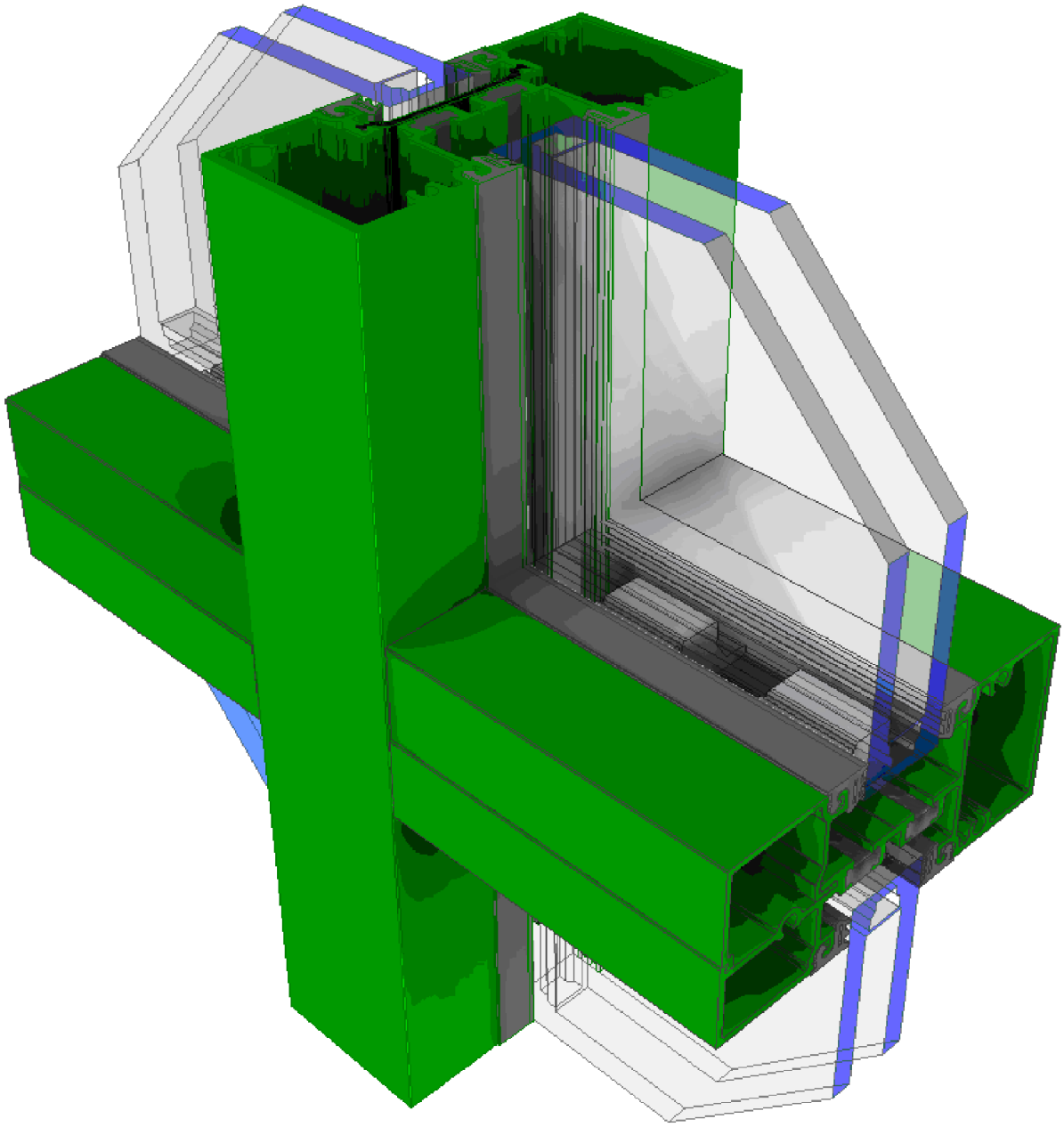

14000 Series Storefront

INSTALLATION INSTRUCTIONS

7800 International Drive, Wausau, WI 54401 877-678-2983

BLANK

TABLE OF CONTENTS

GENERAL CONSTRUCTION NOTES 5

PARTS LIST 6-21

QUICK REFERENCE CHECKLIST 22

ELEVATION DETAILS 23-27

FRAME FABRICATION

Step 1 Determine Frame Size 28
Step 2 Cut Material to Size 28
Step 3 Sill Flashing 29-30
Step 4 Verticals & Closer Pockets for Horizontals 31-32
Step 5 Horizontals for Shear Block Assembly 33
Step 6 Shear Block Modification 34
Step 7 Steel Stiffener 35
Step 8 Corner Sill Flashing Fabrication 36
Step 9 Corner Sill Flashing Installation 37
Step 10 Corner Frames 38

FRAME ASSEMBLY

Step 11 Sill Flashing End Dams 39
Step 12 Optional High Sidelite Base 40-42
Step 13 Optional Sidelight Base 43
Step 14 Assemble Frames 44-48

FRAME INSTALLATION

Step 15 Sill Flashing Installation 49
Step 16 Sill Flashing Splicing 50
Step 17 Install Frames 51-52
Step 18 Frame at Entrance 53

GLAZING

Step 19 Glazing Preparation 54
Step 20 Installing Glazing Units 55-58

CORNER CONDITIONS for ROTATIONAL MULLION

Sill Flashing Fabrication & Installation 59-60

BLANK

GENERAL CONSTRUCTION NOTES

1. These instructions cover typical product application, fabrication, installation and standard conditions and are general in nature. They provide useful guidelines, but the final shop drawings may include additional details specific to the project. Any conflict or discrepancies must be clarified prior to execution.

2. Materials stored at the job site must be kept in a safe place protected from possible damage by other trades Stack with adequate separation so materials will not rub together and store off the ground. Cardboard or paper wrapped materials must be kept dry. Check arriving materials for quantity and keep a record of where various materials are stored.

3. For cold weather installations, glazing materials (including but not limited to glazing gaskets, isolators and gaskets for air seals and expansion mullions) can become more rigid and thus more difficult to install. These materials should be installed at temperatures above 40°F for proper system performance and ease of installation. A hot box may be required to warm the glazing materials prior to installation. Allow glazing materials to lay flat at 50°F minimum temperature for several hours prior to installing.

4. All field welding must be done in accordance with AISC guidelines. All aluminum and glass should be shielded from field welding to avoid damage from weld splatter. Results will be unsightly and may be structurally unsound. Advise general contractor and other trades accordingly.

5. Coordinate protection of installed work with general contractor and/or other trades.

6. Coordinate sequence of other trades which affect framing installation with the general contractor (e.g. fire proofing, back up walls, partitions, ceilings, mechanical ducts, HVAC, etc.).

7. General contractor should furnish and guarantee bench marks, offset lines and opening dimensions. These items should be checked for accuracy before proceeding with erection. Make certain that all adjacent substrate construction is in accordance with the contract documents and/or approved shop drawings. If not, notify the general contractor in writing before proceeding with installation because this could constitute acceptance of adjacent substrate construction by others.

8. Isolate all aluminum to be placed directly in contact with masonry or other incompatible materials with a heavy coat of zinc chromate or bituminous paint. Fasteners attaching framing to building structure are typically not provided by Tubelite.

9. Sealant selection is the responsibility of the erector, installer and/or glazing contractor and must be approved by the sealant manufacturer with regard to application and compatibility for its intended use. All sealants must be used in strict accordance with the manufacturer's instructions and applied only by trained personnel to surfaces that have been properly prepared.

10. Sealant must be compatible with all materials with which they have contact, including other sealant surfaces. Consult the sealant manufacturer for recommendations relative to shelf life, compatibility, cleaning of substrate, priming, tooling adhesion, environment, temperature, and humidity. Recommend sealant manufacturer perform adhesion "pull test" at "wet" glazing for quality assurance.

11. Drainage gutters and weep holes must be kept clean at all times. Tubelite will not accept responsibility for improper drainage as a result of clogged gutters and weep holes.

12. This product requires clearances at the head, sill and jambs to allow for thermal expansion and contraction as well as construction tolerances. Refer to final distribution drawings for joint sizes. Joints smaller than $\frac{1}{4}$" (6.3mm) may be subject to failure. Consult the sealant manufacturer for proper sizing of joints.

13. All framing members, entrances and other materials are to be installed plumb, level, and true with regard to established bench marks, column center lines, or other working points established by the general contractor and checked by the erector, installer, and/or glazing contractor.

14. After sealant is set and a representative amount of the wall has been glazed (500 square feet or more), run a water hose test to check installation. On large projects, a hose test should be repeated during glazing operation. This testing should be conducted in accordance with AAMA 501.2 specifications.

15. Cleaning of exposed aluminum surfaces should be done per AAMA recommendations.

16. Care must be taken when assembling aluminum framing components. Over tightening any fastener may cause stripping or fastener failure. Tubelite recommends the use of clutched drivers to provide satisfactory tightening of the screw while preventing over torque. The use of impact drill motors is not recommended due to the absence of a clutch device.

17. Check www.TubeliteUSA.com for any installation instruction updates.

VERTICAL EXTRUSIONS

SHAPE	DESCRIPTION	PART No.
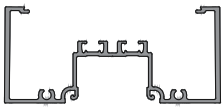	Open Back Head, Jamb & Vertical (Use with E14445, A154040 or TU24442)	E15441 T15441 TU15441
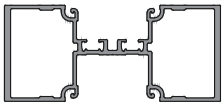	Tubular Intermediate Vertical Mullion	E15000 T15000 TU15000
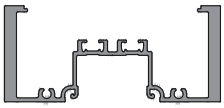	Open Back Heavy Wall Vertical (Use with E14445, A154040 or TU24442)	E15435 T15435 TU15435
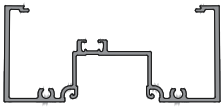	Open Back Head, Jamb & Vertical (Use with E/T15142, or A154040)	E15141 T15141
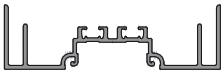	Expansion Vertical Female Half (Mates with E/T/TU15107)	E15106 T15106 TU15106
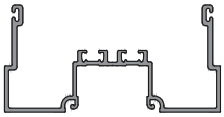	Expansion Vertical Male Half (Mates with E/T/TU15106)	E15107 T15107 TU15107
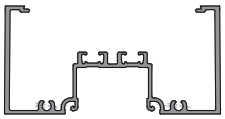	Steel Loading Vertical, 2-1/4" x 4-1/2" (Use with E14445, A154040 or TU24442)	E15243 T15243 TU15243
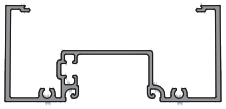	Steel Loading Vertical, 2" x 4-1/2" (Non-Thermal: use E14445, Thermal: use A154040)	E15261 T15261

VERTICAL EXTRUSIONS

SHAPE	DESCRIPTION	PART No.
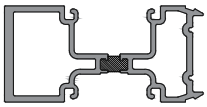	Sunshade Vertical, use with E0992 Face Cover	T14249
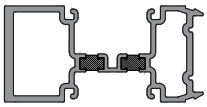	Sunshade Vertical, use with E0992 Face Cover	TU24249
	Face Cover (Use with E24249, T14249, or TU24249 Sunshade Vertical)	E0992
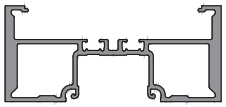	Open-Back/Tube Heavy Wall Vertical, use with E14445 or A154040 (For Surface Applied Sunshades)	E15425 T15425 TU15425
	Heavy Wall Expansion Vertical Female, use with P4615 Anti-Buckling Clip (Consult Engineering for QTY and spacing)	E15449 T15449 TU15449
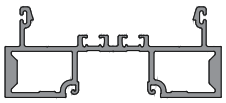	Heavy Wall Expansion Vertical Male, use with P1221 Wiper Gasket	E15450 T15450 TU15450

HORIZONTAL EXTRUSIONS

SHAPE	DESCRIPTION	PART No.
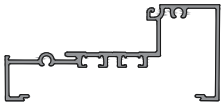	Open Back Sill & Horizontal (Use with E15104 Stop & E14445 or A154040)	E15240 T15240 TU15240
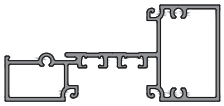	Intermediate Horizontal (Use with E15104 Stop)	E15143 T15143 TU15143

HORIZONTAL EXTRUSIONS

SHAPE	DESCRIPTION	PART No.
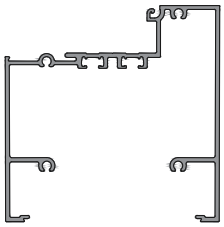	4-1/2" x 4-1/2" Horizontal & Sill (Use with E15104 Stop & E/T15142 or A154040)	E15047 T15047 TU15047
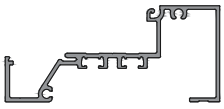	Pinnable Sill (Use with E15104 Stop)	E15230 T15230 TU15230
	Glass Stop (Use with E/T/TU15240, E/T/TU15143, E/T/TU15047, E/T/TU15230)	E15104
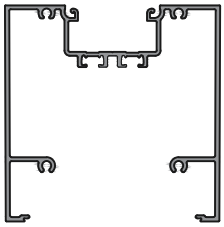	4-1/2" x 4-1/2" Horizontal	E15052 T15052 TU15052
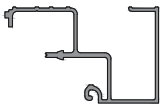	Perimeter Member for Curving (Use with P1707 Clip & E14289)	E14288
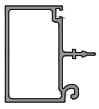	Perimeter Face for Curving (Use with P1707 Clip & E14288)	E14289
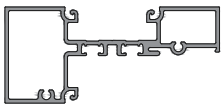	Inside Glazed Intermediate Horizontal (Use with E15104 Stop)	E15543 T15543 TU15543

SIDELITE BASE, SUBSILL, and HEAD RECEPTOR EXTRUSIONS

SHAPE	DESCRIPTION	PART No.
	Standard Head Receptor (Use with E9410 with P6296 Gasket & P15455 End Dam)	E15129 T15129 TU15129
	Standard Head Receptor Snap (Use with E/T/TU15129 with P6296 Gasket)	E9410
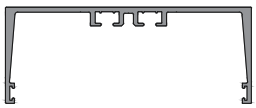	Channel Head Receptor (Use with P6296 Gasket)	E24216 T24216 TU24216
	Lightweight Head Receptor (Use with E14091 with P6296 Gasket)	E14090 T14090
	Lightweight Head Receptor Snap (Use with E/T14090 with P6296 Gasket)	E14091
	Lightweight Channel Head Receptor	E45116
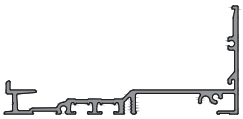	Standard Subsill (Use with P15455 End Dam)	E15259 T15259 TU15259
	Optional Subsill Starter (Use with E/T/TU15259)	E15260
	Optional Non-Thermal Subsill (Use with P2455 End Dam)	E14059
	Optional Subsill (Use with P2455 End Dam)	T14055

SIDELITE BASE, SUBSILL, and HEAD RECEPTOR EXTRUSIONS

SHAPE	DESCRIPTION	PART No.
	Optional Thermal Subsill (Use with P2455 End Dam)	T14259
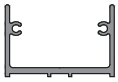	Sidelite Base Anchor Channel (Use with E14026)	E14027
	4-1/2" x 2" Sidelite Base (Use with E14026 Anchor Channel, E14024 Glazing Gutter, E14025 Glass Stop & P1137 Clip)	E14026

CORNER EXTRUSIONS

SHAPE	DESCRIPTION	PART No.
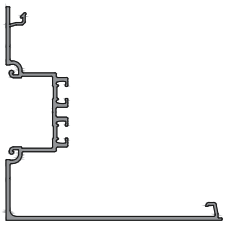	Single Pocket Corner Half (Use with E/T/TU15119 for 90° Corner, E15110 for Jamb, Itself for Intermediate Vertical & E/T/TU15111 for 3 Way Corner)	E15118 T15118 TU15118
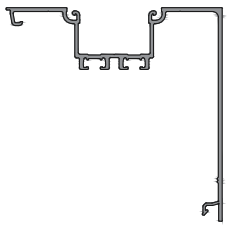	Single Pocket Corner Half (Use with E/T/TU15118 for 90° Corner, E15110 for Jamb, Itself for Intermediate Vertical & E/T/TU15111 for 3 Way Corner)	E15119 T15119 TU15119
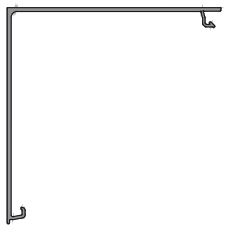	Flat Corner Half (Use with E/T/TU15118 or E/T/TU15119 for Jamb, E/T/TU15111 (x2) for 90° Corner)	E15110
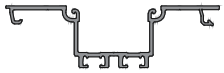	Self Mating Corner Quarter (Use with Itself & E15110 for 90° Corner, Itself & E/T/TU15118 or E/T/TU15119 for 3 Way Corner, Itself (x4) for 4 Way Corner)	E15111 T15111 TU15111

CORNER EXTRUSIONS

SHAPE	DESCRIPTION	PART No.
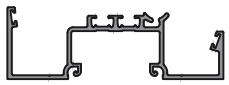	Rotational Vertical Mullion Half (Use with E/T/TU15247 & P1221 Gasket)	E15246 T15246 TU15246
	Rotational Vertical Mullion Center (Use with E/T/TU15246 (x2))	E15247 T15247 TU15247
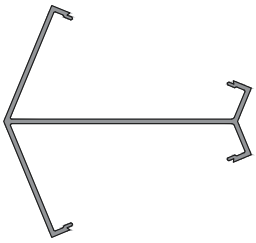	Non Thermal 135° Corner (Use with E14445, E/T15142, E/T14022, A154040 or A155050)	E45005
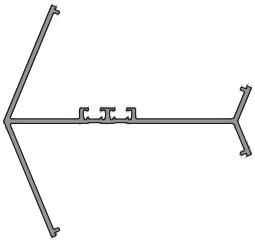	135° Corner (Use with E/T/TU15322 (x2))	E15319 T15319 TU15319

POCKET FILLERS and GLAZING ADAPTORS

SHAPE	DESCRIPTION	PART No.
	Non Thermal Shallow Pocket Filler	E14445
	Single P&D Shallow Pocket Filler	E15142 T15142
	Single P&D Deep Pocket Filler	E14022 T14022
	Strutted Shallow Pocket Filler	A154040
	Strutted Deep Pocket Filler	A155050
	Dual P&D Shallow Pocket Filler (Use with E15325 or A628080 Door Jamb)	E15322 T15322 TU15322
	Dual P&D Flat Filler (Use with E15325 or A628080 Door Jamb)	E15343 T15343 TU15343
	Flat Aluminum Snap Filler	E4543
	6" Aluminum Flat Snap in Filler, Anchor Plate Use at Head and Jamb Anchor Points as Required	P1745
	10' Flat PVC Snap in Filler Use Between Anchor Points as Required	P2474
	Flat Aluminum Snap in Filler	T6251
	6" Flat Aluminum Snap in Filler Use at Head and Jamb Anchor Points as Required	P1130

POCKET FILLERS and GLAZING ADAPTORS

SHAPE	DESCRIPTION	PART No.
	Thermal Closure Plate	TU24442
	6" Flat Thermal Snap in Filler Use at Head and Jamb Anchor Points as Required	P2445
	Snap in Sidelite Base Adaptor (Use 2 Pieces with E/T/TU15240/E/T/TU15141 & 400 CW 3/4" Face Cover Int. & Ext.)	E15248 T15248 TU15248
	Aluminum 1" (25.4mm) Pocket Filler	E1411
	PVC 1" (25.4mm) Pocket Filler	P4563
	Thermal 1" (25.4mm) Pocket Filler	E15011 T15011
	Snap in 1/4" (6.3mm) Glazing Adaptor	E15036
	Snap in 1/2" (12.7mm) Glazing Adaptor	E15061
	Slide in Brake Metal Receiver	E15139
	2-1/2" Face Cap, use with E/T/TU15248 for Stacked Sill Assembly	E4TB64

DOOR FRAME EXTRUSIONS

SHAPE	DESCRIPTION	PART No.
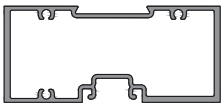	Standard Tubular Door Header	E15124
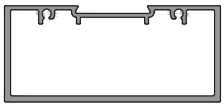	Tubular Door Header	E15125
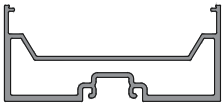	Open Back Tubular Door Jamb (Use with E15322, T15322, E15343 or T15343)	E15325
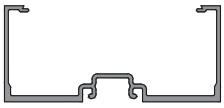	Open Back Door Jamb (Use with P1745, P2474, P1130, T6251, E15142, T15142, E14022, T14022 or E14445)	E14144
	Open Back Center Hung Door Jamb (Use with P1745, P2474, P1130, T6251, E15142, T15142, E14022, T14022 or E14445)	E1438
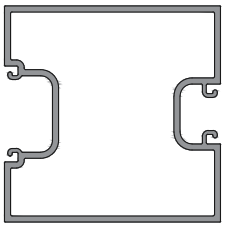	4-1/2" x 4-1/2" (114.3mm x 114.3mm) Tubular Door Jamb	E14250
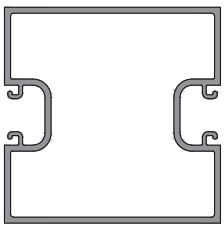	4-1/2" x 4-1/2" (114.3mm x 114.3mm) Tubular Intermediate Door Jamb	E45009
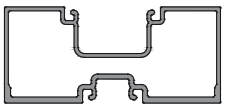	Tubular Door Jamb	E14021
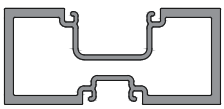	Heavy Tubular Door Jamb	E14121

DOOR FRAME EXTRUSIONS

SHAPE	DESCRIPTION	PART No.
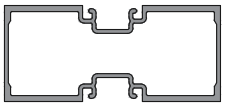	Tubular Intermediate Door Jamb	E14145
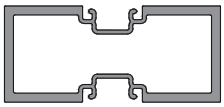	Heavy Tubular Intermediate Door Jamb	E14245
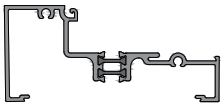	Strutted Door Transom Header (Use with P2445 or TU24442)	A642324
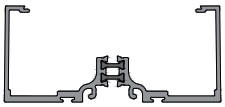	Strutted Open Back Door Jamb (Use with P2445, TU24442, A154040 or A155050)	A646060
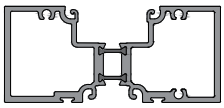	Strutted Tubular Door Jamb	A649192
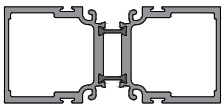	Strutted Tubular Intermediate Door Jamb	A646565
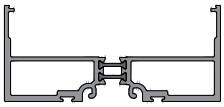	Strutted Open Back Tubular Door Jamb (Use with TU15322 or TU15343)	A648080
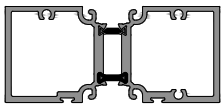	Strutted Tubular Door Head	A645859

DOOR FRAME EXTRUSIONS
OPTIONAL TUBE MEMBERS

SHAPE	DESCRIPTION	PART No.
	2" x 4 1/2" x 1/8" (50.8 mm x 114.3mm x 3.2mm) Tube	E1451
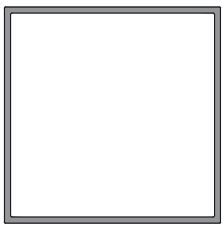	4 1/2" x 4 1/2" x 1/8" (114.3mm x 114.3mm x 3.2mm) Tube	E0133

DOOR FRAME ACCESSORIES

SHAPE	DESCRIPTION	PART No.
	Screw Applied Transom Gutter	E1414
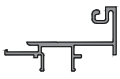	Snap-in Transom Gutter	E4013
	Snap-in Transom Gutter	E14024
	Transom Gutter Glass Stop For E4013 & E1414	E4015
	Transom Gutter Glass Stop For E14024	E14025

DOOR FRAME ACCESSORIES

SHAPE	DESCRIPTION	PART No.
	Non-Thermal Snap-in Door Stop	E4531
	Offset Arm Door Stop	E2298
	1/2" Thermal Door Stop For 3/16" Inset 1-3/4" Door	E5926
	PVC Lower Door Stop	P5923
	3/4" Thermal Door Stop For 3/16" Inset 1-3/4" Door	E5928
	1/2" Thermal Door Stop For 1/16"-1/8" Inset 1-3/4" Door	E5946
	3/4" Thermal Door Stop For 1/16"-1/8" Inset 1-3/4" Door	E5948
	1/2" Thermal Door Stop For Flush 1-3/4" Door	E5966
	3/4" Thermal Door Stop For Flush 1-3/4" Door	E5968
	Threshold	E2550 TA2550

DOOR FRAME ACCESSORIES

SHAPE	DESCRIPTION	PART No.
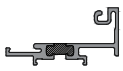	Thermal Transom Gutter, use with E15225 glass stop	T15224
	Thermal Transom Glass Stop	E15225
	Shear Clip, use for	P532A
	Shear Clip, use for	P531A
	Shear Clip, use for E0133 Door Header	P917A
	Shear Clip, use for E15124 Door Header	P1141
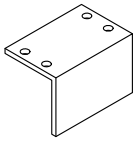	Sidelite Base Anchor Clip (use with E14027, (2) S149 & (2) S191 screws per clip)	P1137
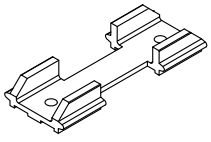	Floor Clip for E14145 Tube	P1638
	Steel Reinforcing - Primer Painted 12'-0" lengths	P1437

FRAME ACCESSORIES

SHAPE	DESCRIPTION	PART No.
	Head Shear Clip	P15033
	Horizontal & Sill Shear Clip	P15043
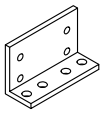	Clip for Perimeter Curving - Back	P288
	Clip for Perimeter Curving - Face	P289
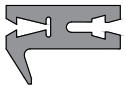	Frame Clip for Curving Head Members	P1707
	Anti-Buckling Clip, use with 15449 Heavy Wall Expansion Vertical	P4615

GASKETS and SETTING BLOCKS

SHAPE	DESCRIPTION	PART No.
	Roll-in Glazing Gasket for 1" (25.4mm) Glass	P2728
	Roll-in Glazing Gasket for 1-1/8" (28.6mm) Glass	P487
	Roll-in Glazing Gasket for Undersized Glass	P2428

GASKETS and SETTING BLOCKS

SHAPE	DESCRIPTION	PART No.
	Wiper Gasket for One Piece Head Receptor and Rotational Mullion	P1221
	Wiper Gasket for Expansion Mullion	P4630
	Bulb Gasket for Head Receptor	P6296
	Wedge Gasket for Standard Subsill	P2901
	Pile Weathering for Thermal Door Frames	P1098A
	Typical Setting Block	P2470 (EPDM) P2470S (SILICONE)
	Setting Block (use at sill for inside glazed system)	P1167 (EPDM) P1167S (SILICONE)
	Setting Block (use for inside glazed intermediate horizontal)	P4628 (EPDM) P4629 (SILICONE)
	Setting Block At Transom	P4720 (EPDM) P4732 (SILICONE)
	Setting Block (alternative to P2470 or P1167)	P1180 (EPDM) P1180S (SILICONE)

WATER CONTROL ACESSORIES

SHAPE	DESCRIPTION	PART No.
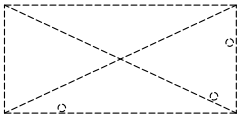	End Dam for 15259 subsill and 15129 head receptor	P15455
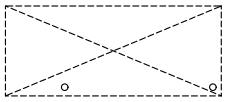	End Dam for T14055, E14059, or T14259 subsill	P2455
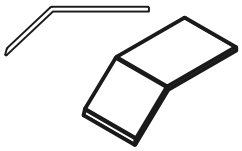	Water Diverter (Use at Intermediate Horizontals)	P1165
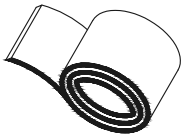	Silicone Splice Sleeve (Standard) (Use at T14055, E14059, and T14259 Sill Flashing)	P3444
	Water Diverter 12'0", use for Curved Head	P1709
	Optional, Open Cell Weep Baffle 1/2" x 1" x 3" long	PTB42
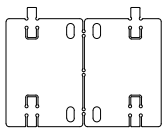	Mullion Cap (Optional)	P15233

ADDITIONAL ACESSORIES

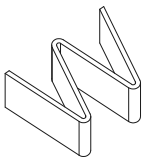	EPDM AntiWalk "W" Block (Optional) (Use at Deep Pockets on Verticals and Jambs)	P1917
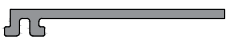	Head Receptor Strap Anchor (Optional use in15129 head receptor)	P2918
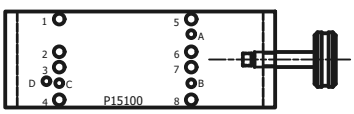	Drill Fixture for Screw Spline and Shear Clip assembly	P15100

FASTENERS

SHAPE	DESCRIPTION	PART No.
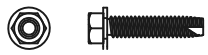	#12-23 x 1" Type 23 hex head washer (Screw spline frame assembly screws)	S204
	#10 1 3/4" type B Philips Pan Head (Fastens shear block to verticals)	S009
	#10-24 x 1/2" type F phillips pan head thread cutting (fastens shear clip to horizontals)	S128
	#12 x 3/4" Philips Flat Head (Fastens head member to shear block & sidelite base to P1137 anchor)	S149
	#10 x 1/2" Philips Truss Head (Fastens horizontal and sill to shear block & P1137 anchor to vertical)	S191
	#8 x 3/8" type A Philips Pan Head (Fastens end dam to sill flashing)	S196
	#12-24 x 5/8" Type 23 Phillips Flat Head	S286
	#10-24 x 1-1/2" Phillips Flat Head, 18-8 Stainless (use for E2298 door stop)	S303

QUICK REFERENCE CHECKLIST

1. Make sure the opening is square and the caulk joints are $\frac{1}{4}$"(6.3mm) minimum around the frame. Note: Frames that utilize the T14259, or E/T/TU15259 sill flashing must have a minimum of $\frac{3}{8}$" (9.5mm) caulk joint at head.
2. Ensure surfaces that will be sealed are free of contaminants that can lead to adhesion issues.
3. Sill flashing must be properly shimmed and level from left to right and front to back for proper drainage.
4. A continuous line of sealant must be applied between the sill and the top interior leg of the sill flashing.
5. Check that all weeps and baffles (if required) conform to the locations and sizes called out in these instructions.
6. Ensure that sill flashing weep holes are not plugged by the perimeter seal.
7. A sill flashing splice is needed in openings larger than 24 feet (7315.2mm). Follow instructions for installing and sealing.
8. End dams must be installed and sealed onto the sill flashing. Fasteners used must also be sealed.
9. Where the sill flashing abuts a door jamb, the jamb pocket cavity must be completely sealed to dam this area.
10. Cap seal any exposed anchor or screw.
11. Seal ends of horizontal frame members that are joined to vertical members.
12. Water diverter installation and sealing is critical. Check installation against instructions to ensure conformity.
13. Apply sealant between all corner gasket joints.
14. Glass bites must be equal on all sides.
15. Double check anchor size and location against installation instructions or approved shop drawings.
16. Ensure that interior seal is married to sill flashing interior leg.

GLASS SIZE CALCULATION
Width tolerance = + 0", - $\frac{1}{16}$"(-1.6mm)

Typical Framing:

Glass Width = D.L.O plus $\frac{3}{4}$"(19mm)

Glass Height = D.L.O plus $\frac{3}{4}$"(19mm)

Transoms with Sash:

Glass Width = Pocket filler D.L.O plus $\frac{3}{4}$"(19mm)

Glass Height = Pocket filler D.L.O plus $\frac{3}{4}$"(19mm)

(Ref. **Fig.19.1**)

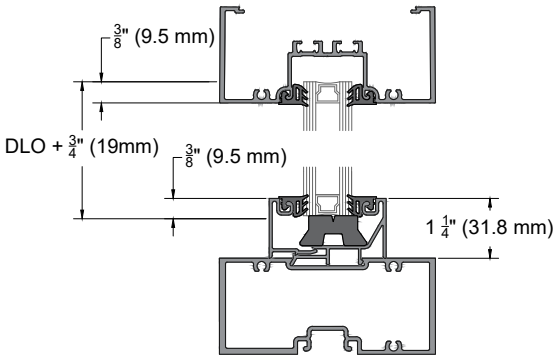

VERTICAL D.L.O. at SASH
FIG. 19.1

TYPICAL ELEVATION with DETAILS

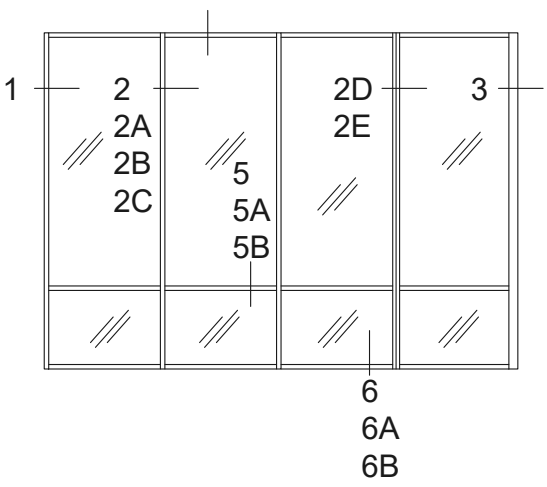

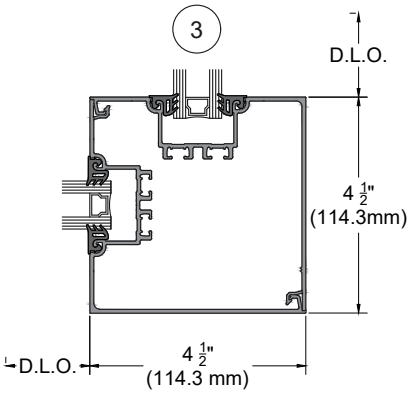

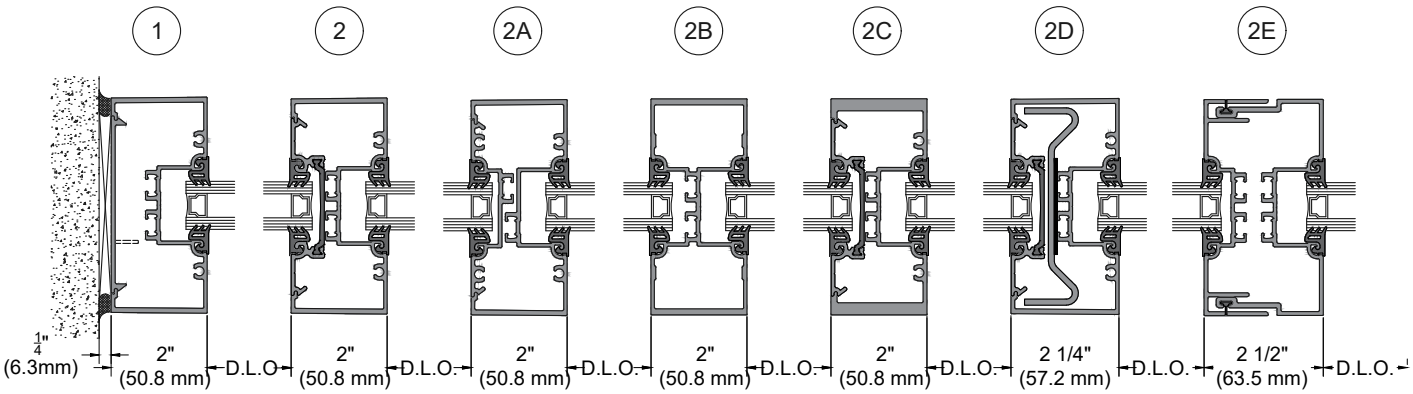

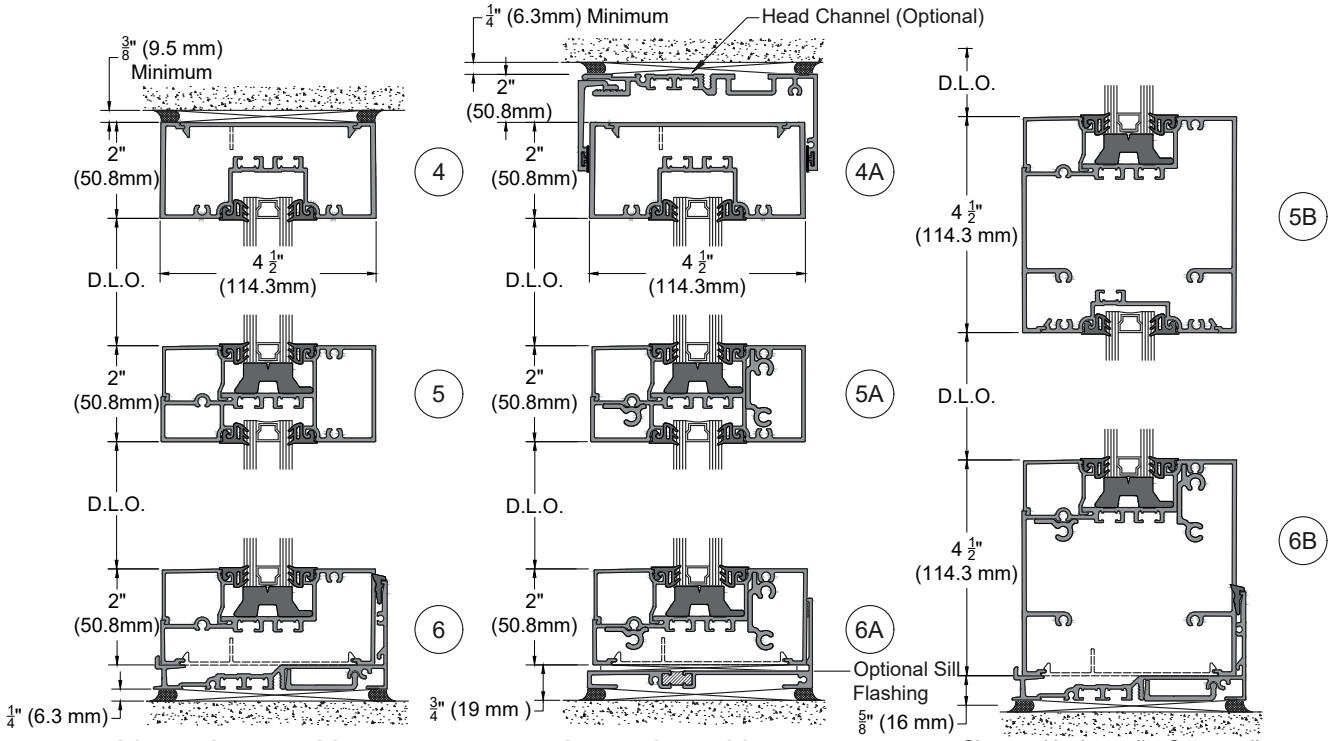

SCREW SPLINE ASSEMBLY

SHEAR CLIP ASSEMBLY

Shown with shear clip. Screw spline assembly similar without clip.

DOOR FRAME ELEVATION with HORIZONTAL DETAILS

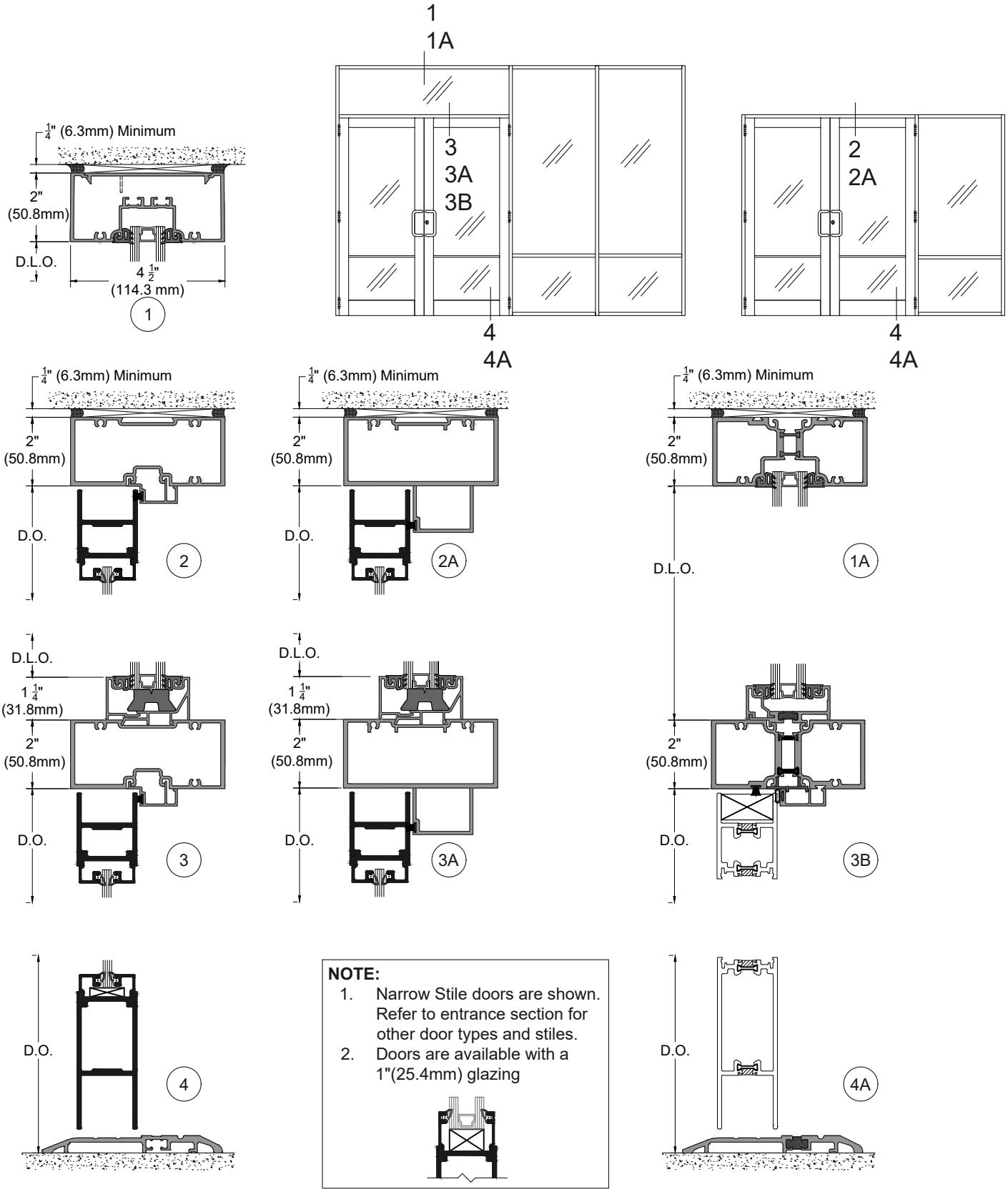

NOTE:

1. Narrow Stile doors are shown. Refer to entrance section for other door types and stiles.
2. Doors are available with a 1"(25.4mm) glazing

DOOR FRAME ELEVATION
with VERTICAL DETAILS

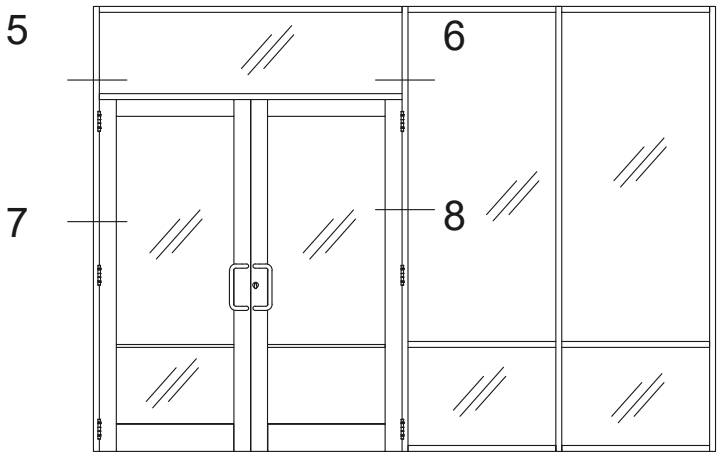

NOTE:

1. Narrow Stile doors are shown. Refer to entrance section for other door types and stiles.
2. Doors are available with a 1"(25.4mm) glazing

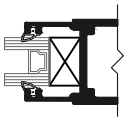

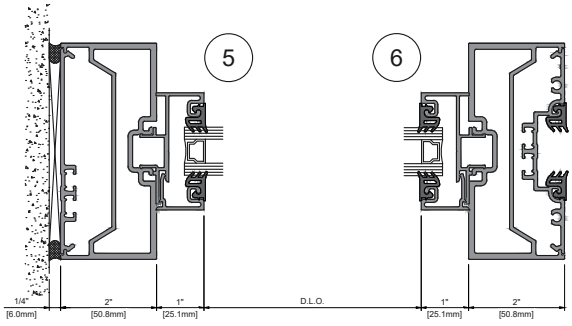

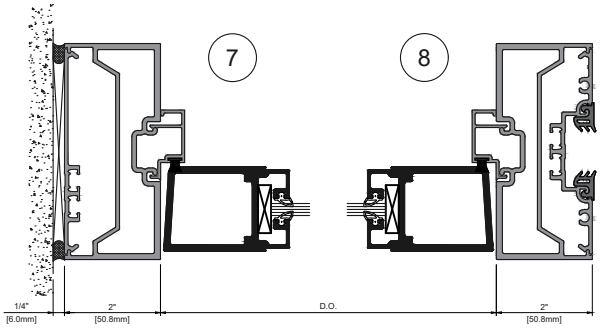

DOOR FRAME ELEVATION
with VERTICAL DETAILS

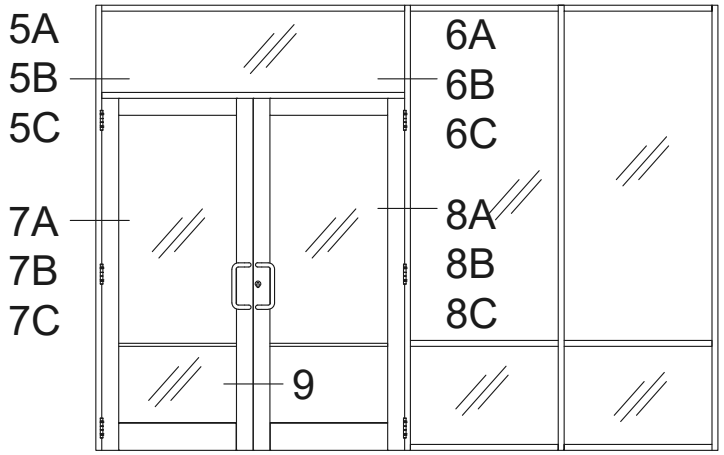

NOTE:
1. Narrow Stile doors are shown. Refer to entrance section for other door types and stiles.
2. Doors are available with a 1"(25.4mm) glazing

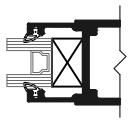

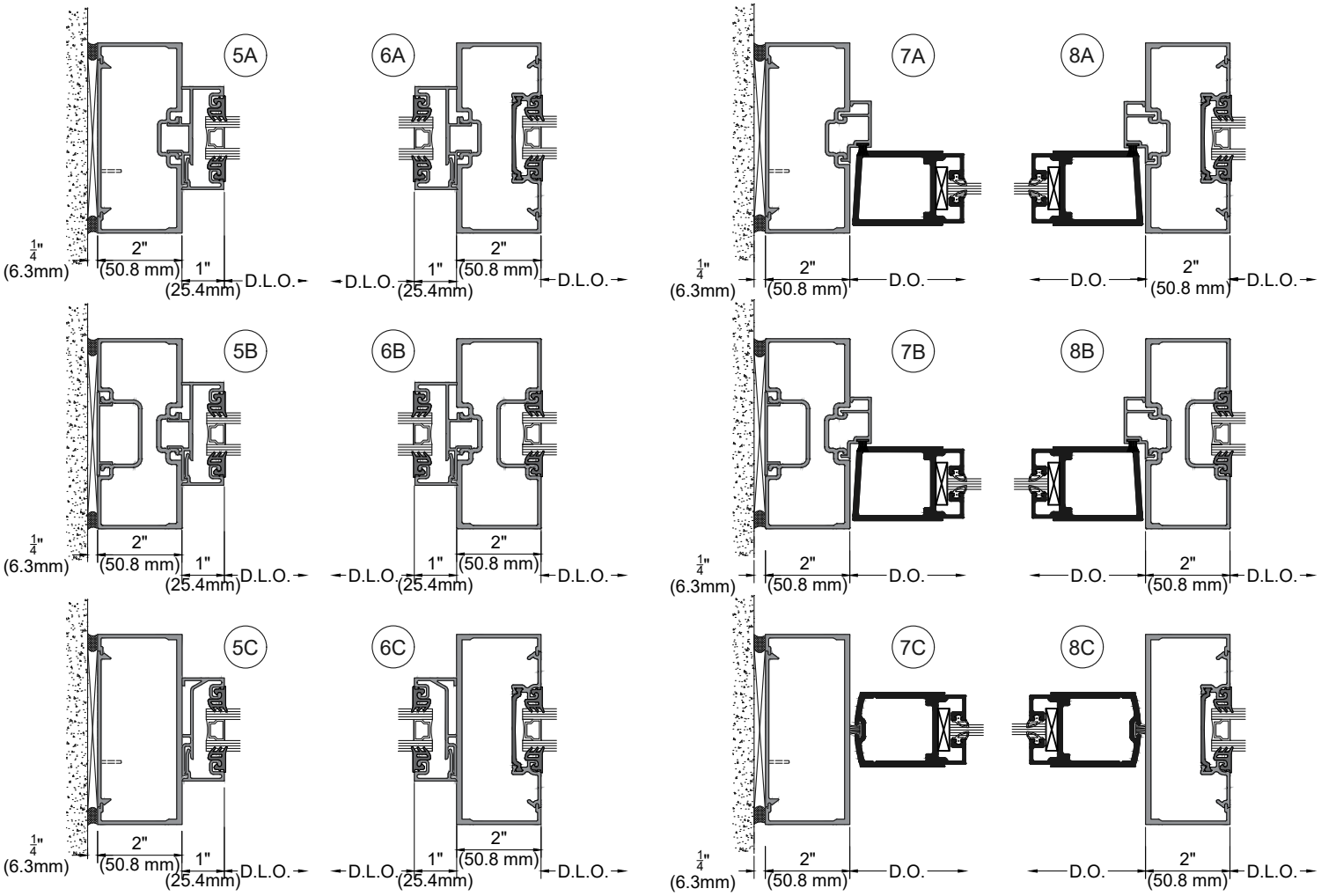

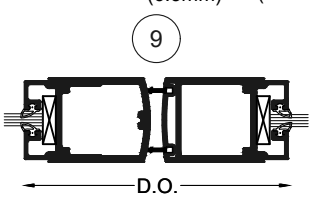

DOOR FRAME ELEVATION
with VERTICAL DETAILS

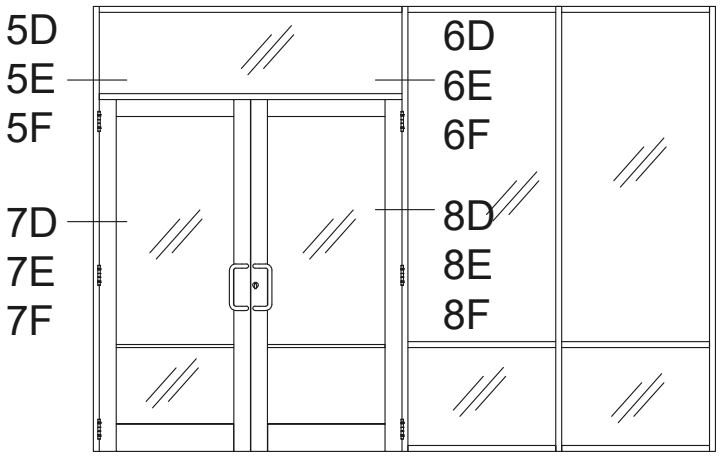

NOTE:

1. Narrow Stile doors are shown. Refer to entrance section for other door types and stiles.
2. Doors are available with a 1"(25.4mm) glazing

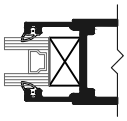

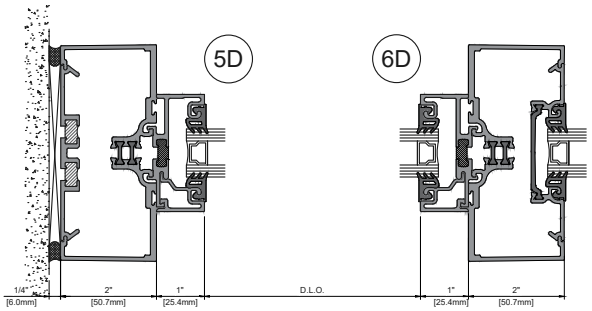

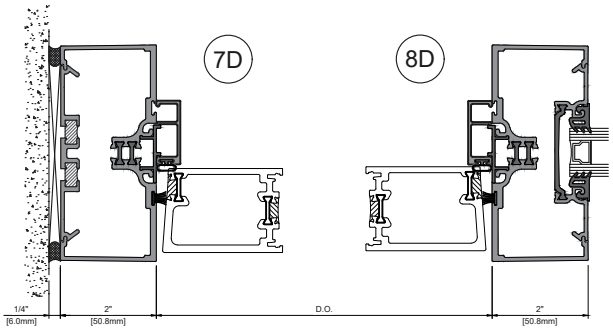

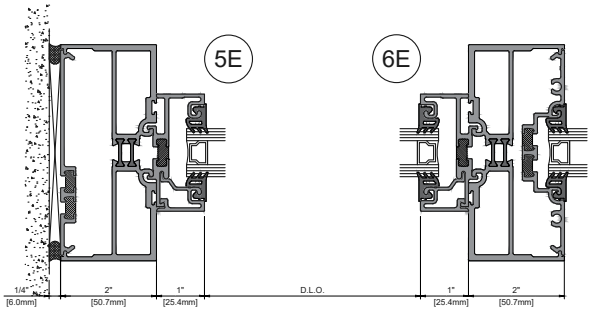

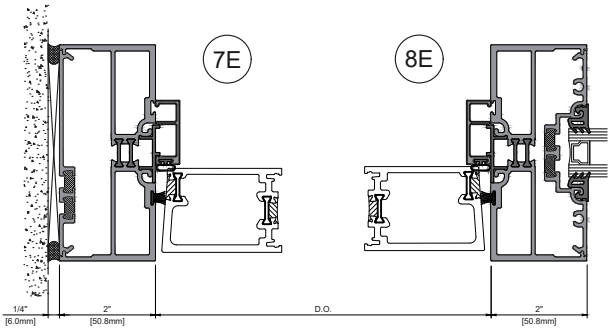

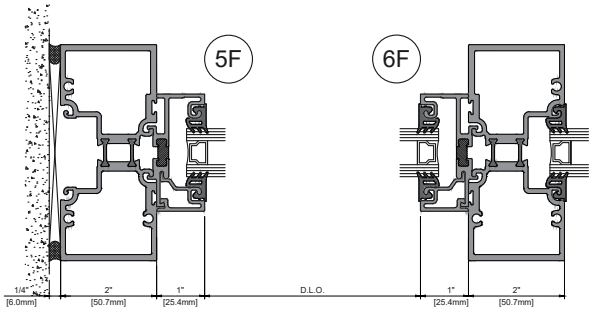

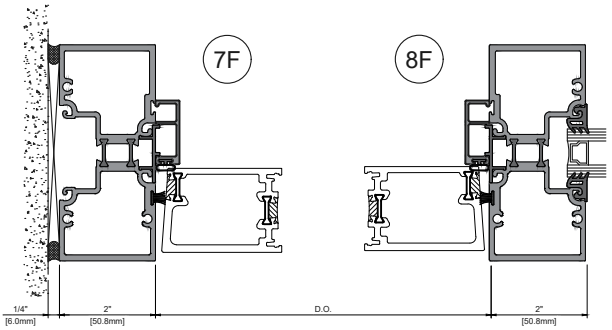

FRAME FABRICATION

NOTE: Non-thermal extrusions are shown in these instructions for clarity. Fabrication and installation of thermal members are the same.

Step 1: Determine Frame Size

A. Make sure the opening is square and plumb. Measure each diagonal of the opening. **SEE Fig. 1.**

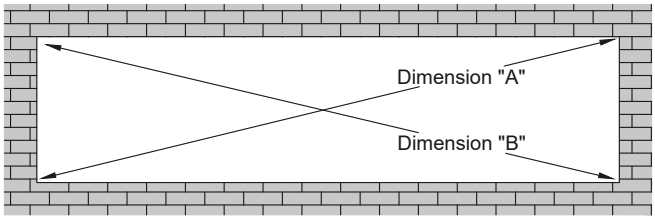

FIG. 1. Dimension "A" = "B"

Frame Width

B. Measure the width of the opening at the top, middle, and bottom. Select the smallest of these dimensions and subtract the left and right caulk joint width per approved shop drawings ($\frac{1}{4}$"(6.3mm) min caulk joint at each jamb). **SEE Fig. 2**.

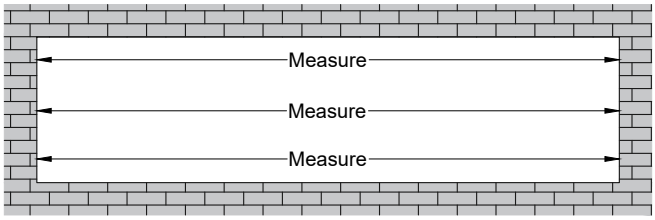

FIG. 2.

Frame Height

C. Measure the height of the opening at several points along the entire width of the opening. Select the smallest of these dimensions and subtract the top and bottom caulk joint height per approved shop drawings ($\frac{1}{4}$"(6.3mm) minimum caulk joint at sill. At head, caulk joint can be $\frac{1}{4}$"(6.3mm) using T14055 or similar flashing. When using T14259, E14059 or E/T/TU15259 sill flashing, head caulk joint must be $\frac{3}{8}$"(9.5mm)). **SEE Fig. 3**.

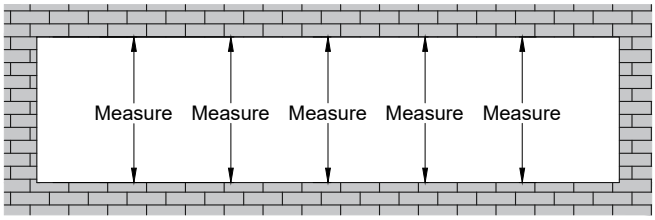

FIG. 3.

FRAME FABRICATION

Step 2: Cut Material to Size

Note: Door framing material comes cut to size from the factory. In cases of door frames with transoms, the door jambs must be cut down in the field to size and head member attached per standard instructions shown within this manual.

Door Jamb with Transom height will equal the Rough Opening height - head caulk gap (minimum $\frac{1}{4}$" (6.3mm) or match head caulk gap of adjacent storefront based on sill flashing. **See Fig. 1**.)

Framing Members

Sill Flashing with Entrance..... Door Jamb to End of Frame + $\frac{1}{8}$" (+3.2mm) (**SEE Fig. 1.**)
Sill Flashing without Entrance..... Frame Width + $\frac{1}{4}$" (+6.3mm)
Verticals..... **See Fig. 1.**
Head Receptor ..... Frame Width + $\frac{1}{4}$" (+6.3mm)
Head Receptor Snap Stop..... Frame Width + $\frac{1}{4}$" (+6.3mm)
Head, Horizontal & Sill..... D.L.O.
Horizontal & Sill Glass Stops..... D.L.O. - $\frac{1}{32}$" (-0.8mm)
Closure Pockets at Verticals..... **See Fig. 4**
Glazing Adaptors..... D.L.O. - $\frac{1}{32}$" (-0.8mm)
Snap-In Fillers..... Refer to Approved Shop Drawings

Accessories

Exterior Gasket..... D.L.O. + Allowance*
Interior Gasket..... D.L.O. + Allowance*

*Allowance = $\frac{1}{8}$"(3.2mm)extra length per foot of D.L.O.

Sill Flashing Note:
For openings wider than 24'(7315.2mm), the sill flashing must be spliced at the center line of a D.L.O. every twelve to fifteen feet. Splice joint should be $\frac{3}{8}$"(9.5mm) wide. **SEE Step 16, Page 51** for sill flashing splice details.

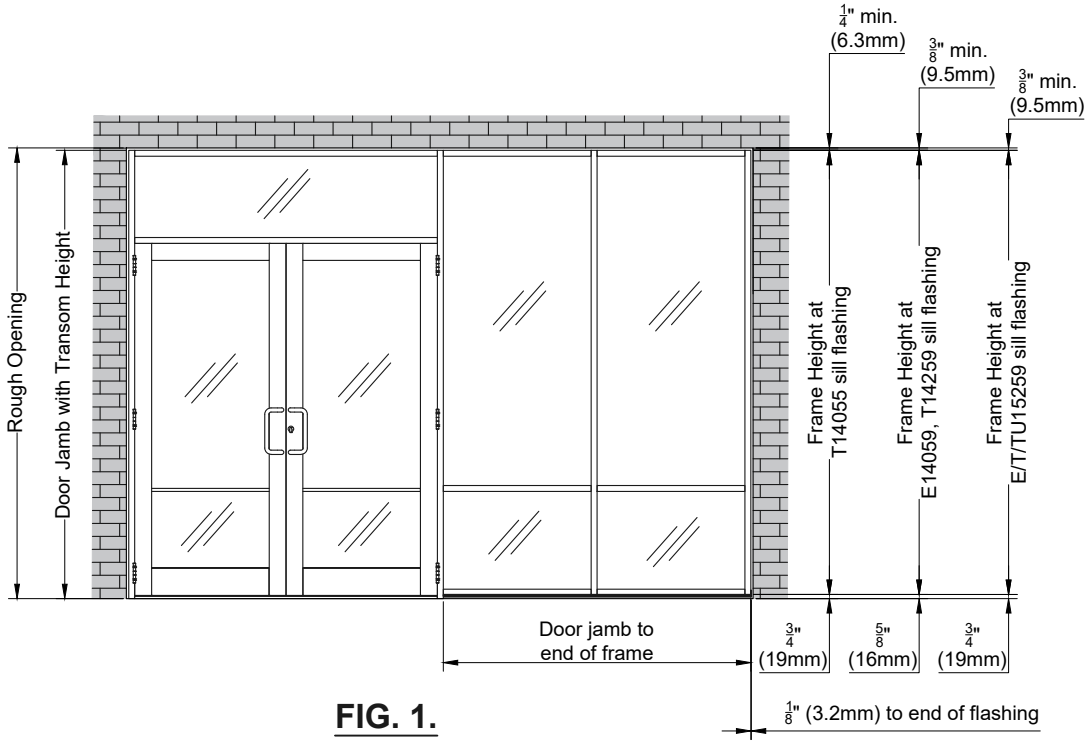

FIG. 1.

Step 3: Fabricate Sill Flashing

A. When using E/T/TU15259, drill two 5/16"(8mm) dia. weep holes at $\frac{1}{4}$ points of the DLO.

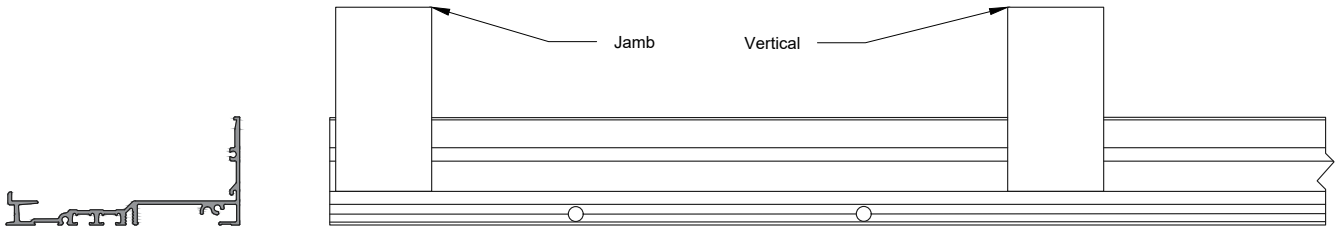

FIG. 1.

B. Drill clearance holes for perimeter anchors. Size and quantity vary per job. Refer to to approved shop drawings.
Note: if head receptors are used, follow the same procedure as on the sill flashing

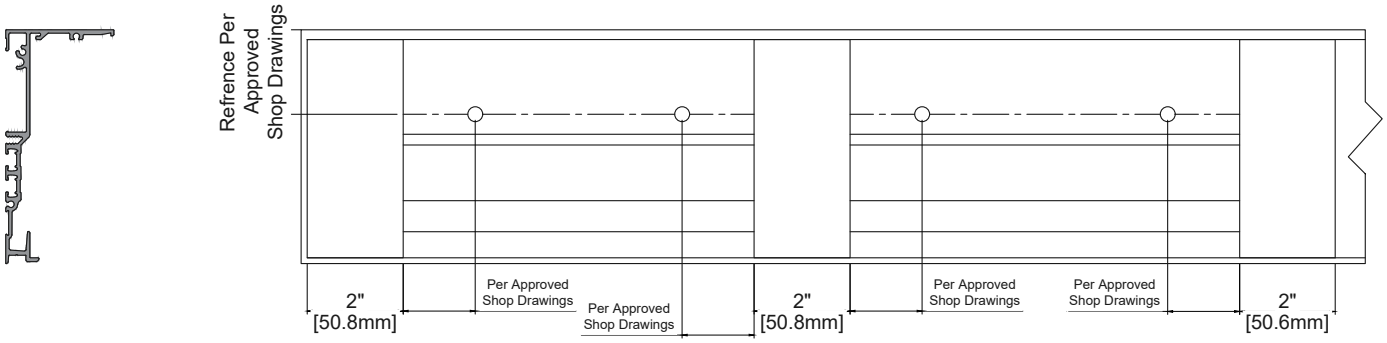

NOTE: *DLO's Larger than 42" (1066.8mm) require an additional anchor hole at the mid-point of the bay*

* Reference approved shop drawings for anchor hole sizes, locations, and quantity

NOTE: ***If E15260 is used for anchoring, see next page.***

FIG. 2.

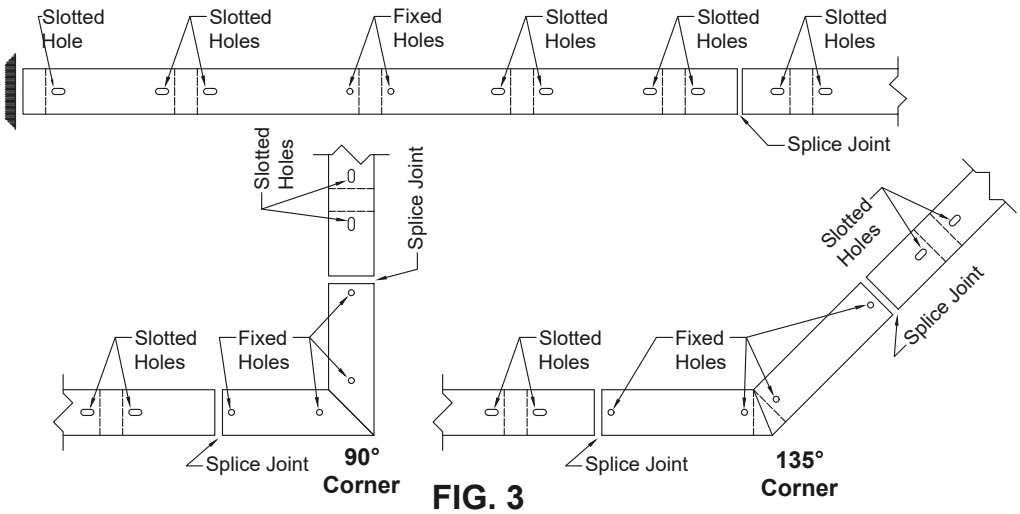

FIG. 3

Typical Sill Flashing Anchor Hole Patterns (Head channel similar)
(Refer to approved shop drawings for project requirements)

Step 3: Fabricate Sill Flashing

A. When using E/T/TU15259 with E15260 Starter, cut E15260 starter 2" short of sill flashing length (1" short each end). Use V-notch in E15260 Starter to guide anchor locations. V-notch is 1-1/2" from interior face of E/T/TU15259 sill flashing. Follow anchor layout in E15260 Starter shown on previous page, or alternatively prep for anchors 24" O.C. and 2" from each end or E15260. Defer to approved shop drawings.

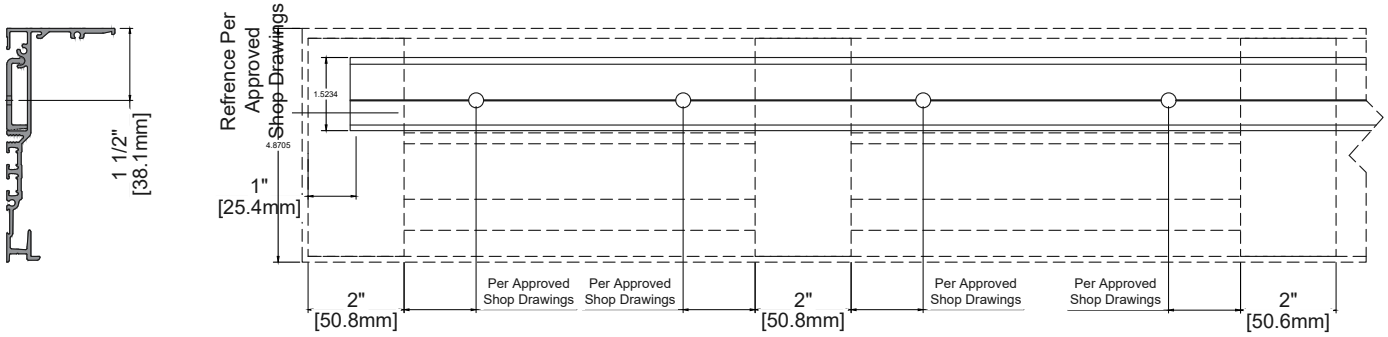

* Reference approved shop drawings for anchor hole sizes, locations, and quantity

FIG. 1.

B. When using the E15260 Starter at a corner condition, cut Starter 1" short of shortest dimension of mitered sill flashing. Not necessary to miter the E15260 Starter. Run E15260 starter through at a sill flashing splice, or stagger starter splice and sill flashing splice. Not necessary to seal the splice gap of the E15260 Starter.

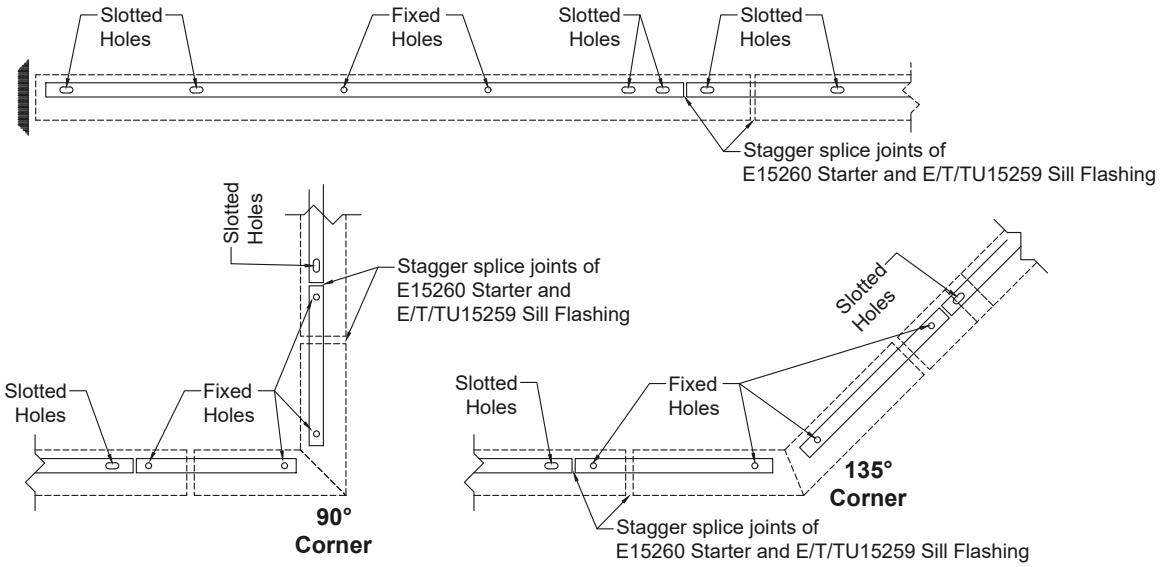

FIG. 2

Typical Anchor Hole Patterns for E15260 Starter at Corner and Splice Conditions
(Refer to approved shop drawings for project requirements)

FRAME FABRICATION

E14059, T14055, and T14259 sill flashing are only tested to 10 PSF water

Step 3: Fabricate Sill Flashing (optional Flashing)

A. When using T14259 or E14059, drill two $\frac{7}{32}$"(5.6mm) dia. weep holes at 2"(50.8") and 6"(152.4mm)from each side of the verticals

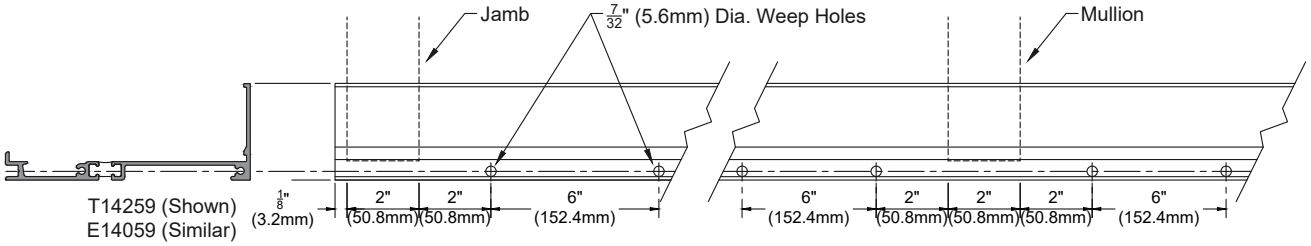

FIG. 1.

B. Drill clearance holes for perimeter anchors. Size and quantity vary per job. Refer to to approved shop drawings.
Note: if head receptors are used, follow the same procedure as on the sill flashing

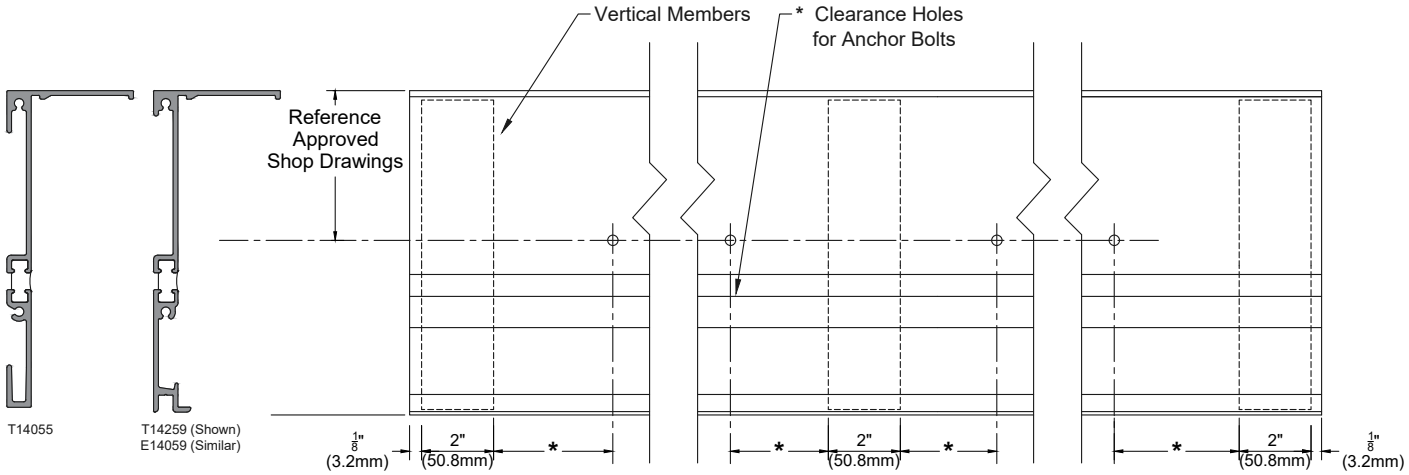

NOTE: *DLO's Larger than 42" (1066.8mm) require an additional anchor hole at the mid-point of the bay*

FIG. 2.

* Reference approved shop drawings for anchor hole sizes, locations, and quantity

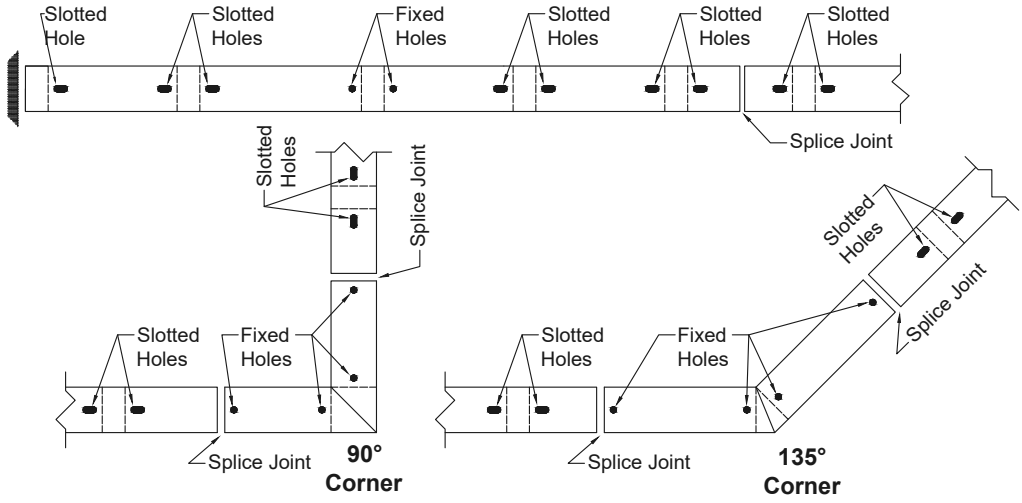

Typical Sill Flashing Anchor Hole Patterns (Head channel similar)
(Refer to approved shop drawings for project requirements)

FIG. 3.

Step 4: Fabricate Verticals & Closure Pockets for Horizontals

A. Drill frame assembly holes in verticals, jambs, & closure pockets. Use short off cut of horizontals to aid in hole layout.

a. For screw spline assembly, see **Fig. 1**
b. For shear block assembly, see next page **Fig. 1**

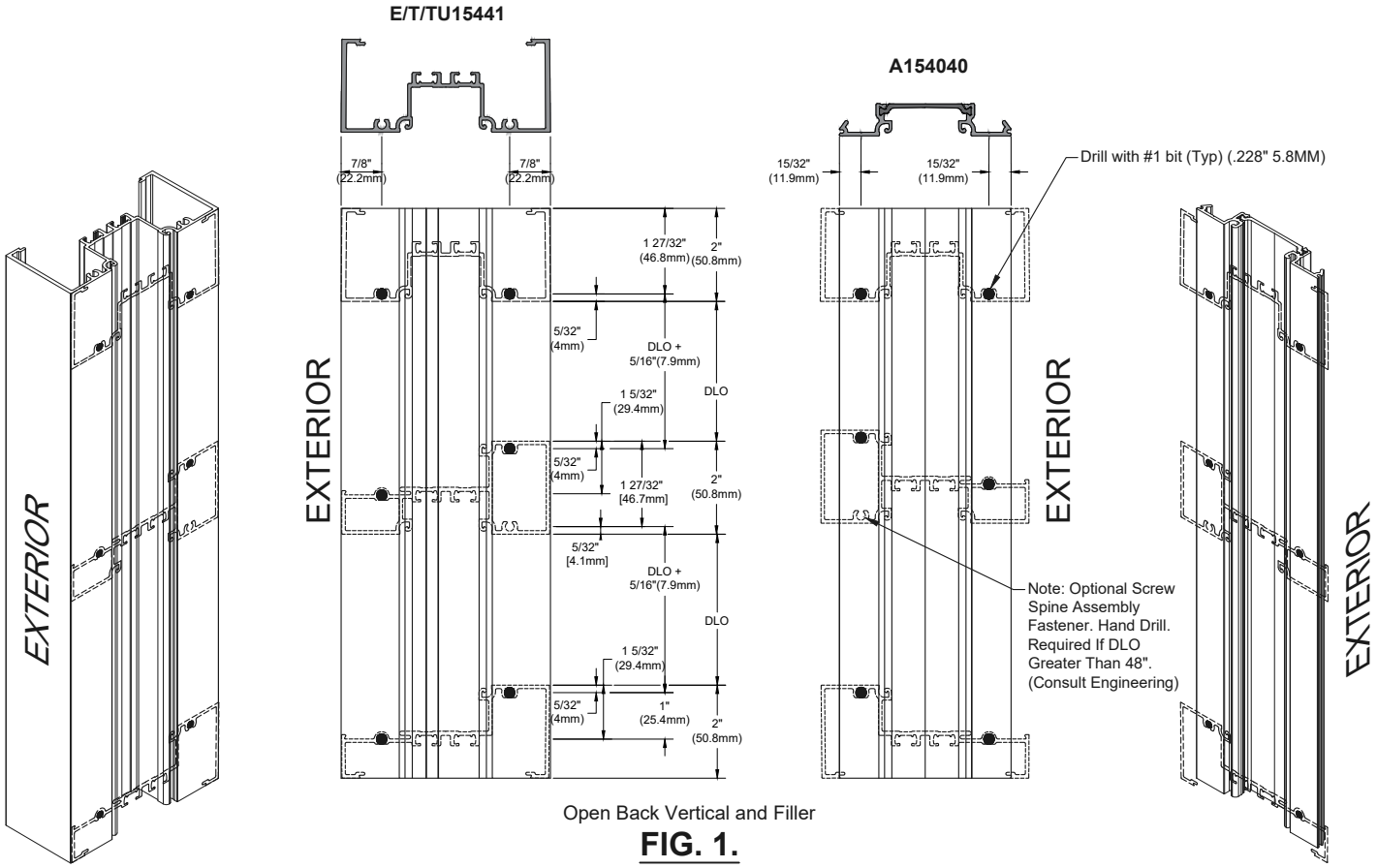

Open Back Vertical and Filler

FIG. 1.

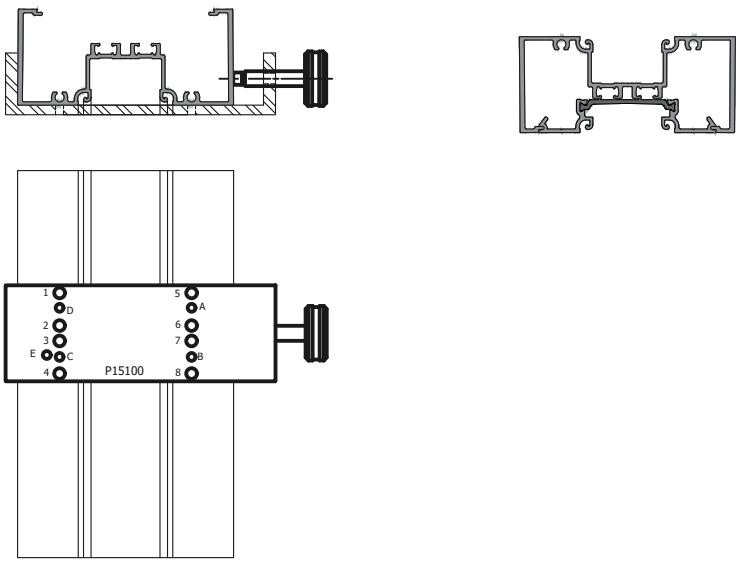

FRAME FABRICATION

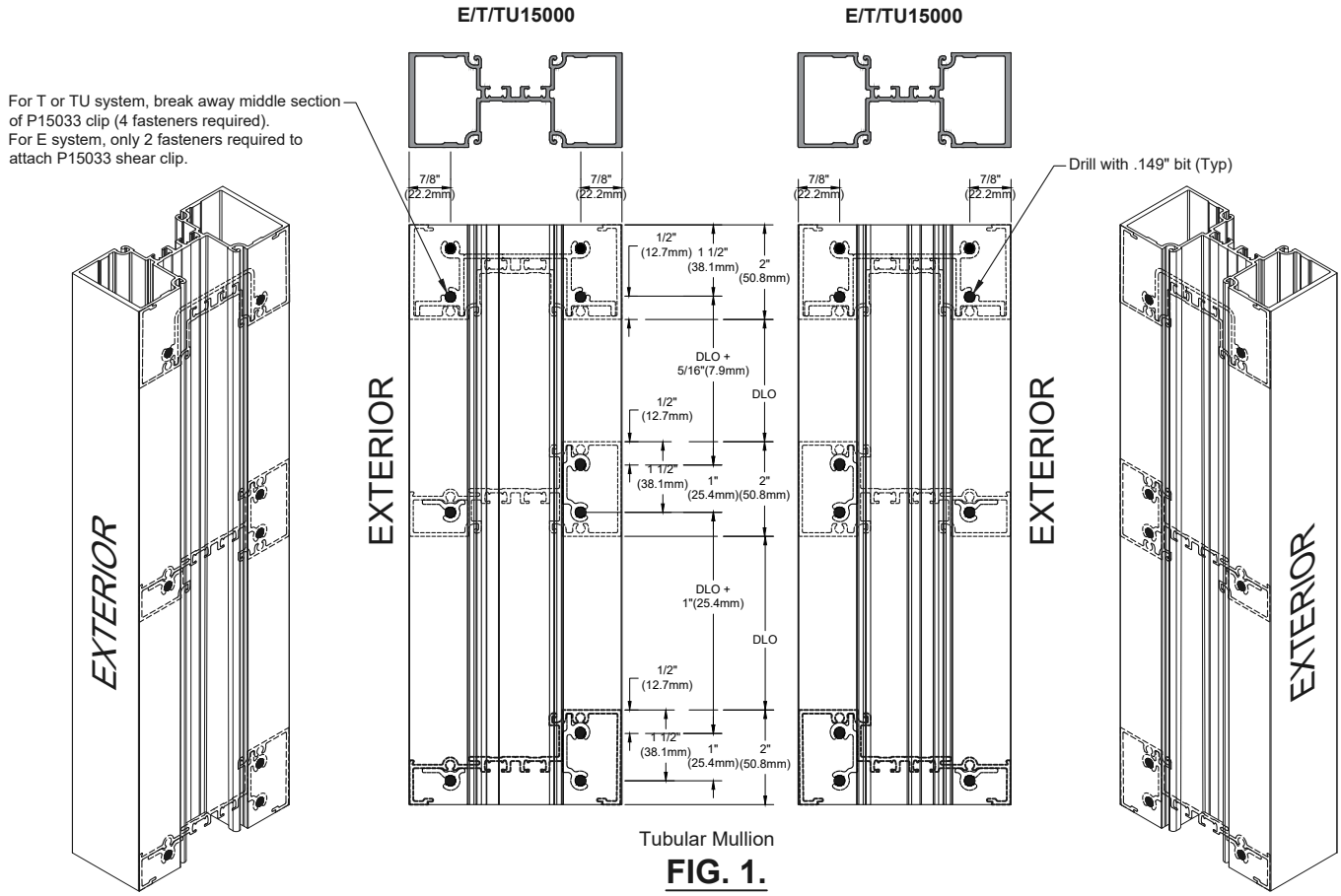

Tubular Mullion

FIG. 1.

Step 5: Fabricate Horizontal Members for Shear Blocks

A. For shear block assembly, drill .201"(5.105mm) dia. holes in the head, horizontal, and sill members as shown in **Fig. 1** & **Fig. 2 (Head members only to receive countersink hole for flat head screws)**.

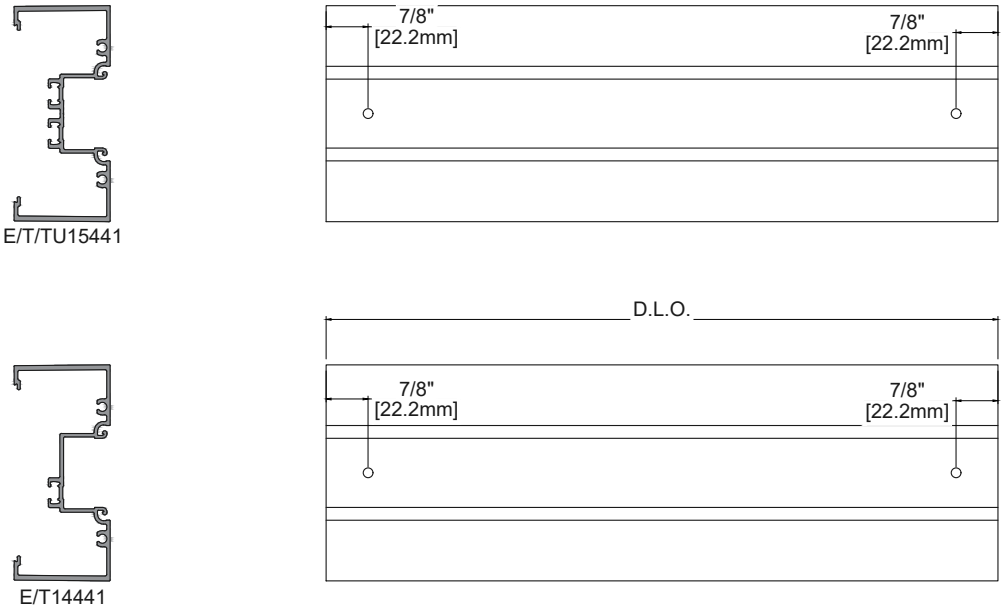

FIG. 1.

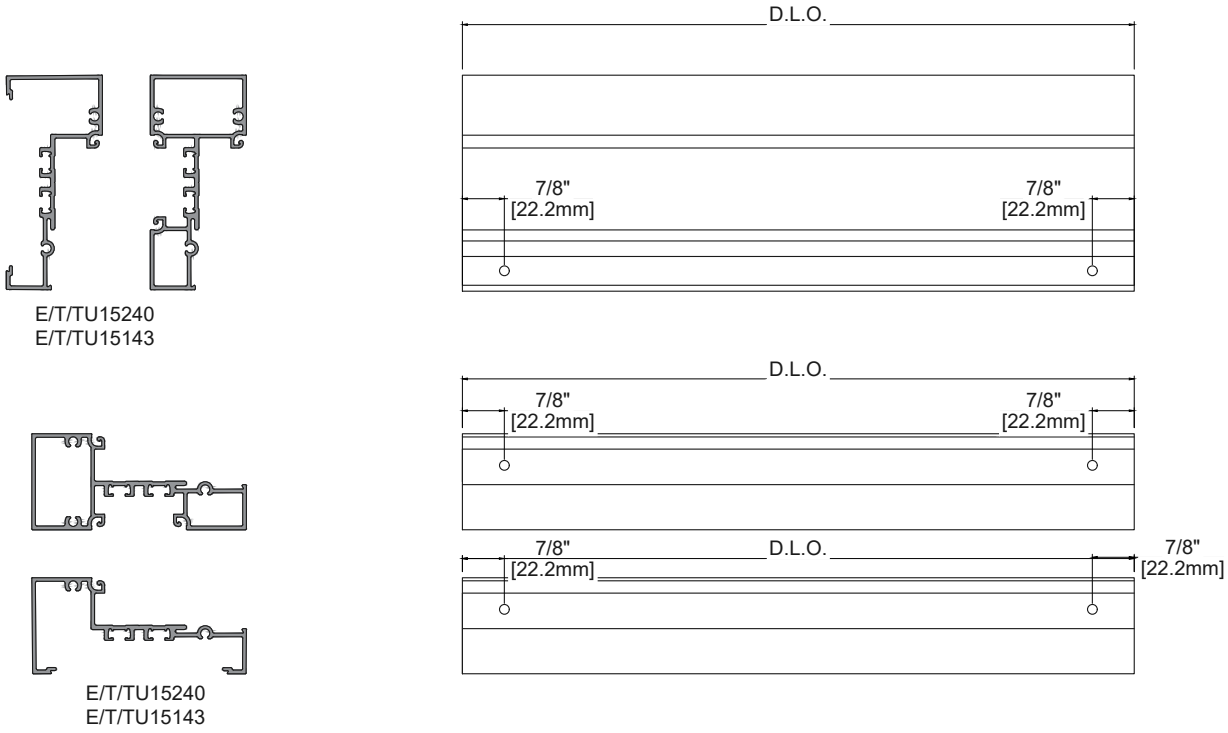

FIG. 2.

FRAME FABRICATION

Step 6: Fabricate Shear Clip (As Required)

A. For shear clip assembly, P15043 shear clip must be modified, and P15033 shear clip should be modified for use in T/TU systems

B. **SEE Fig. 1** & **Fig. 2** for instructions on modifying for the various horizontal sections

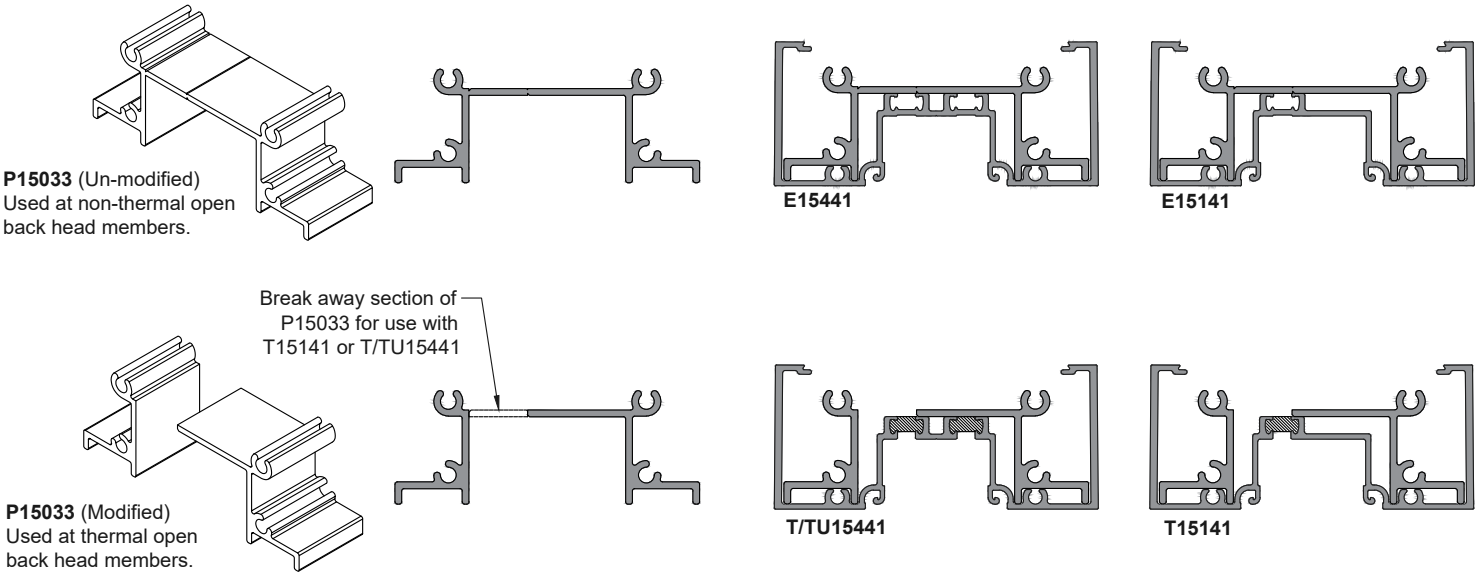

FIG. 1.

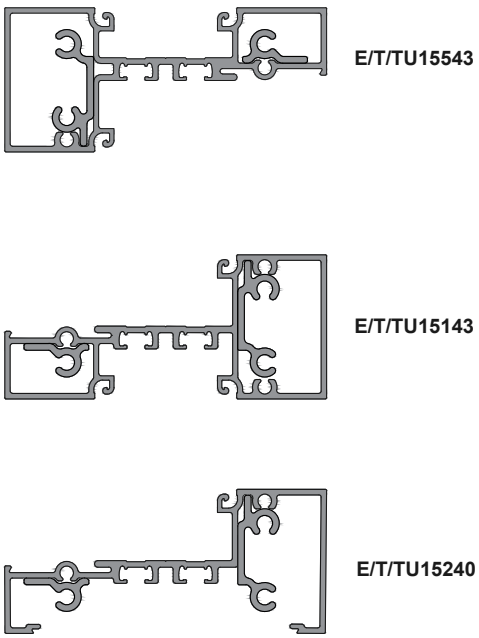

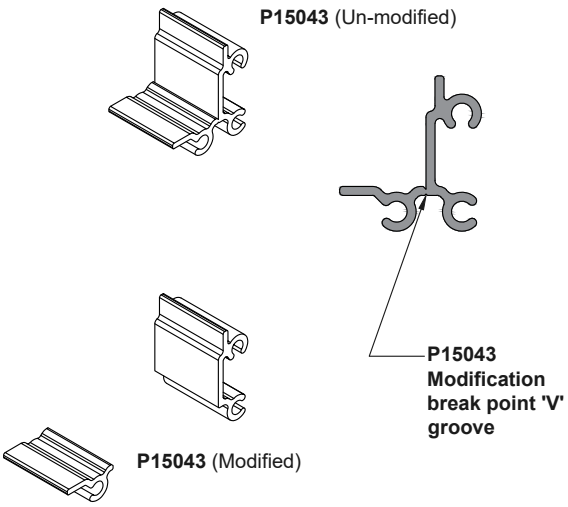

FIG. 2.

FRAME FABRICATION

Step 7: Steel Stiffener (As Required)

A. If P1437 steel stiffeners are required (refer to approved shop drawings), cut 4"(101.6mm) shorter than the vertical mullion length. Paint ends to prevent rust.
B. Use thermal insulator tape or shim (not by Tubelite) to isolate the steel reinforcement from the vertical members (thermal applications only).
C. Drill and countersink clear hole in vertical and tap hole in P1437 steel stiffener for attachment screw. Size and spacing of screw per approved shop drawings.

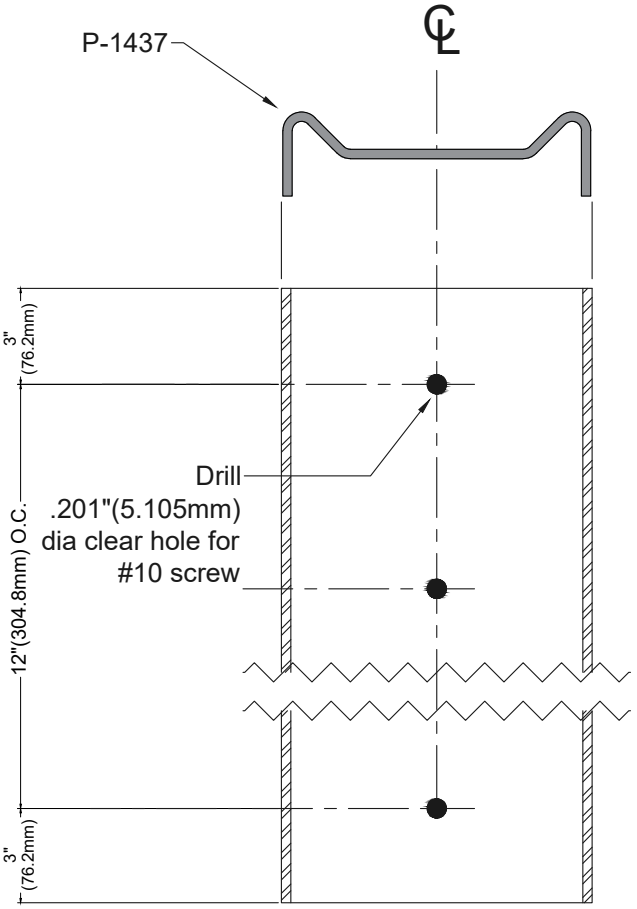

NOTE:
Use of #10 screw at spacing shown as a general guide. Refer to approved shop drawings or enginerer's calculations for specific application.

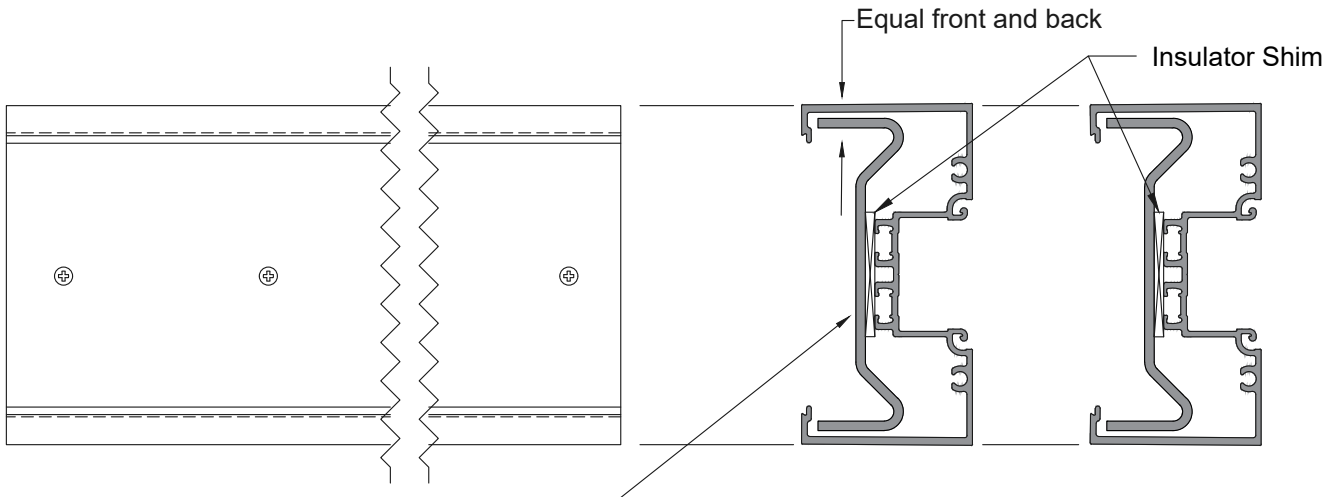

FIG. 1.

NOTE:
E/T/TU15243 Must be used when applying P1437 steel reinforcement.

Step 8: Corner Sill Flashing Fabrication

A. Miter ends of sill flashing as shown in **Figs. 1-4** (One left hand and one right hand.)
B. Drill anchor holes as show.

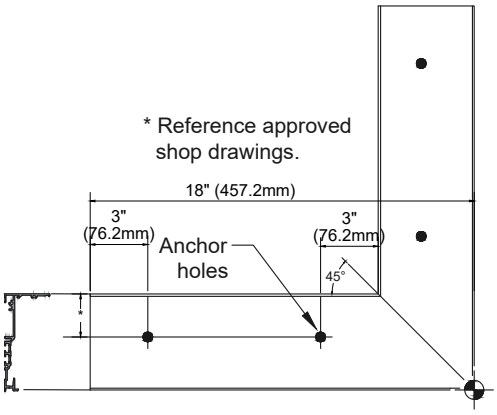

90° OUTSIDE CORNER
FIG. 1.

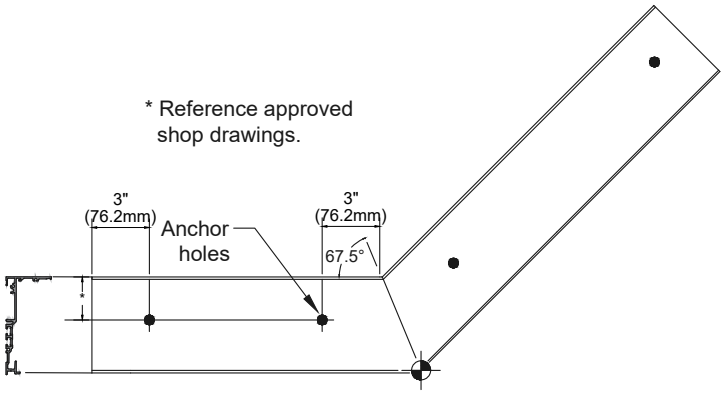

135° OUTSIDE CORNER
FIG. 2

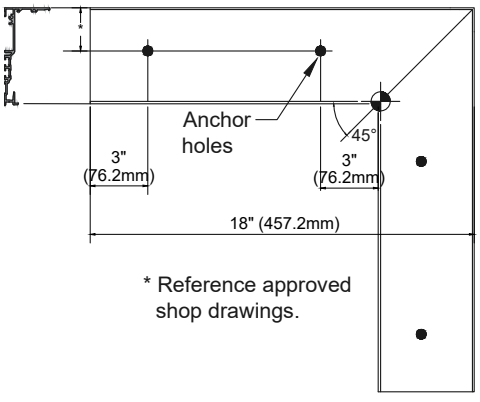

90° INSIDE CORNER
FIG. 3

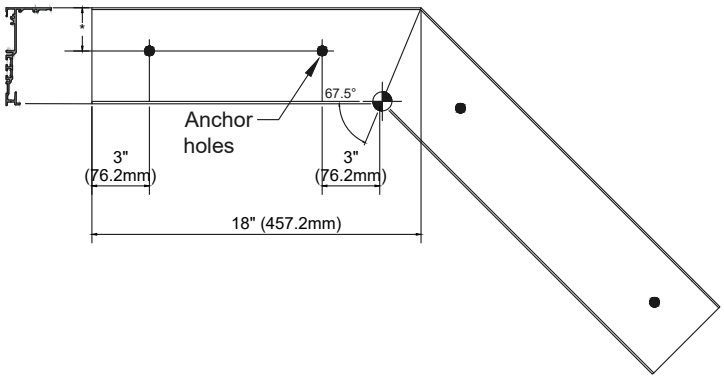

135° INSIDE CORNER
FIG. 4

Step 9: Corner Sill Flashing Installation

A. Install flashing corner members in place.
B. Apply sealant full length of mitered joint. See **Fig. 2**.
C. Splice corner flashing to sill flashing using procedures shown on page 48

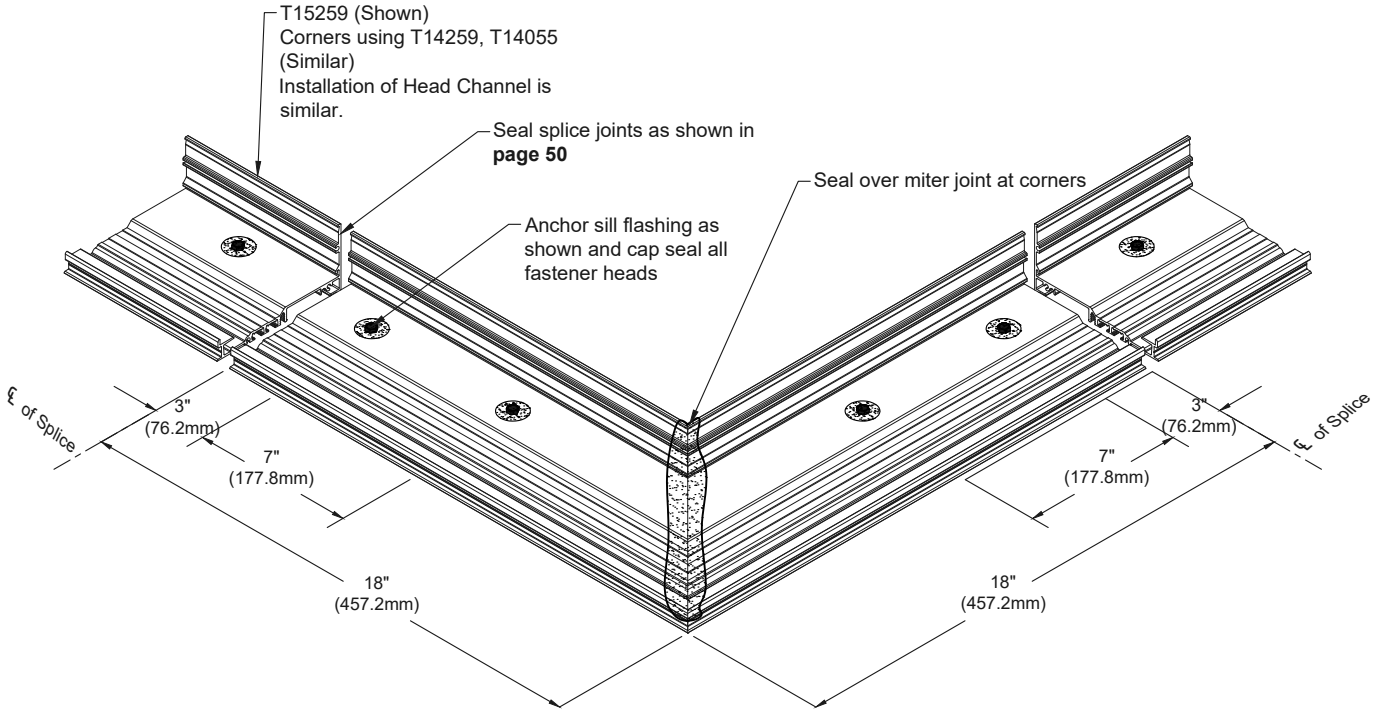

FIG. 1.

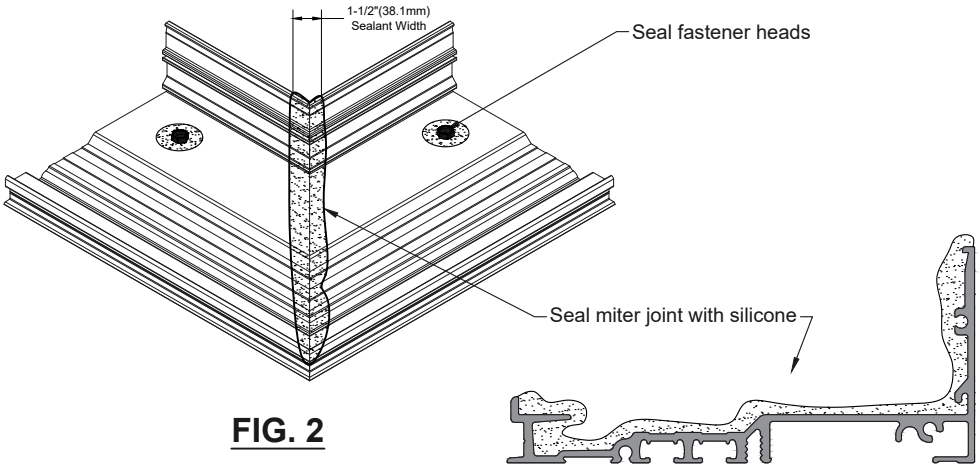

FIG. 2

FRAME FABRICATION

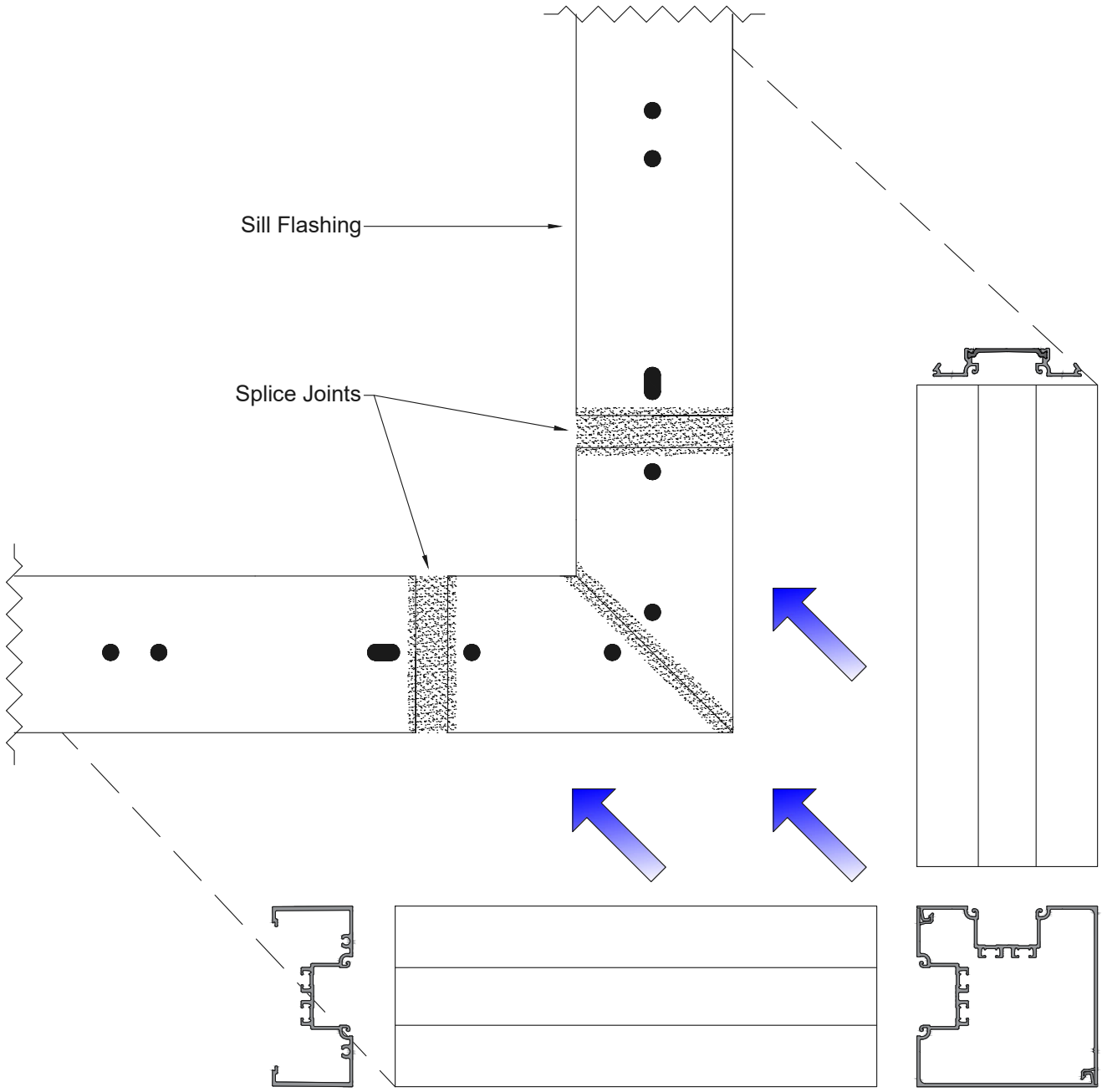

Assemble and install corner unit in one piece
(90° corner shown. 135° corner is similar)

FIG. 1.

FRAME ASSEMBLY

Step 11: Install Sill Flashing End Dams

A. Apply sealant to the entire end of the sill flashing.
B. Install P2455 or P15455 end dam at each end of sill flashing with (2) S196 Set aside and allow sealant to cure. P15455 will require (3) S196

NOTE:
If sill flashing is spliced, install end dams on jamb-end only. Refer to **Step 16, page 50** for splicing instructions.

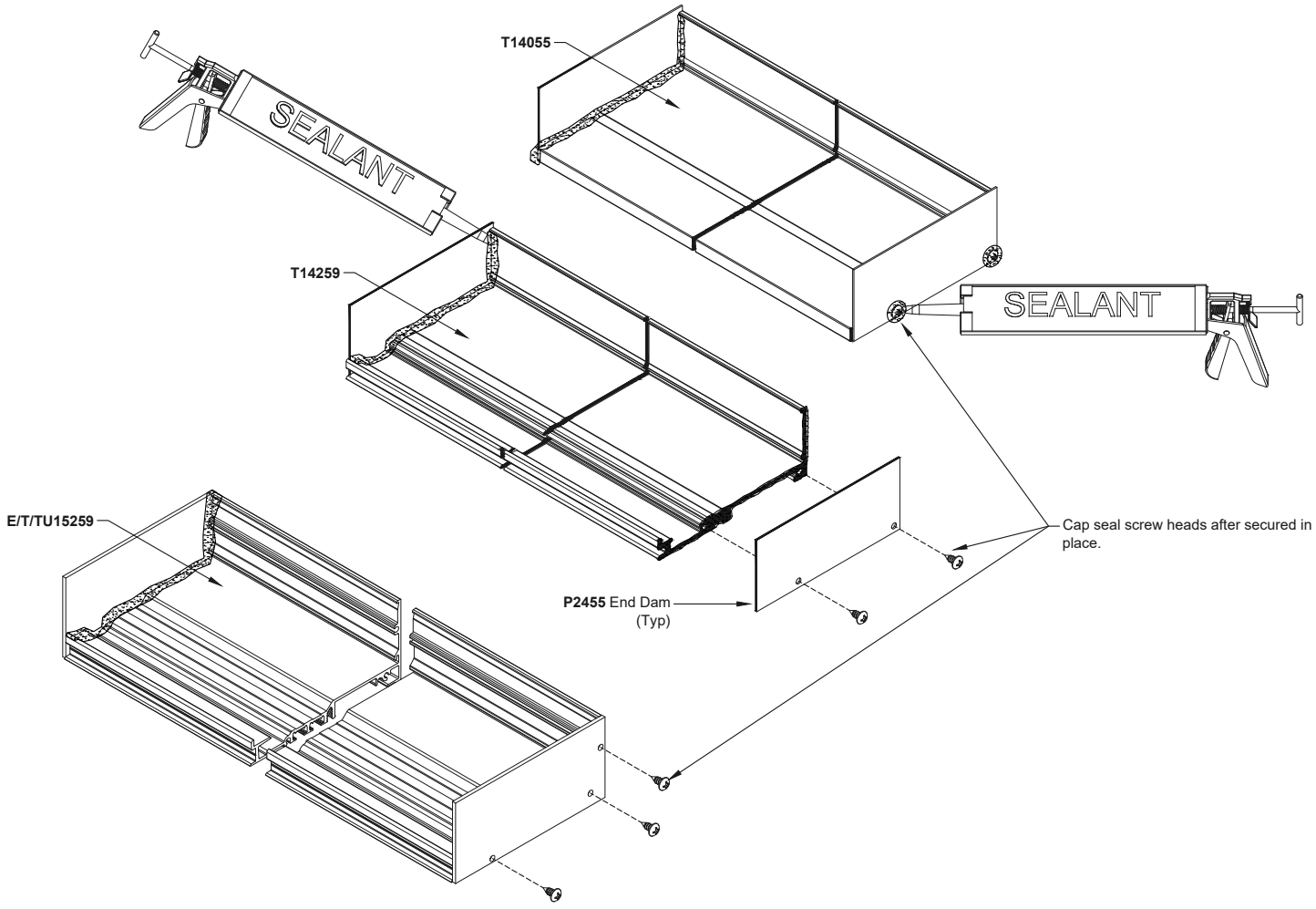

FIG. 1.

FRAME ASSEMBLY

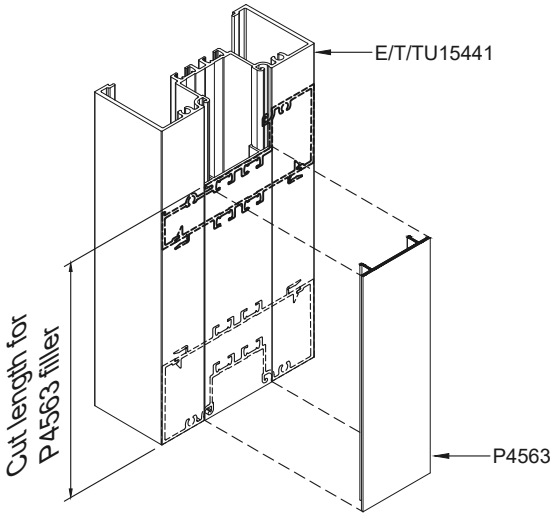

FIG. 1.

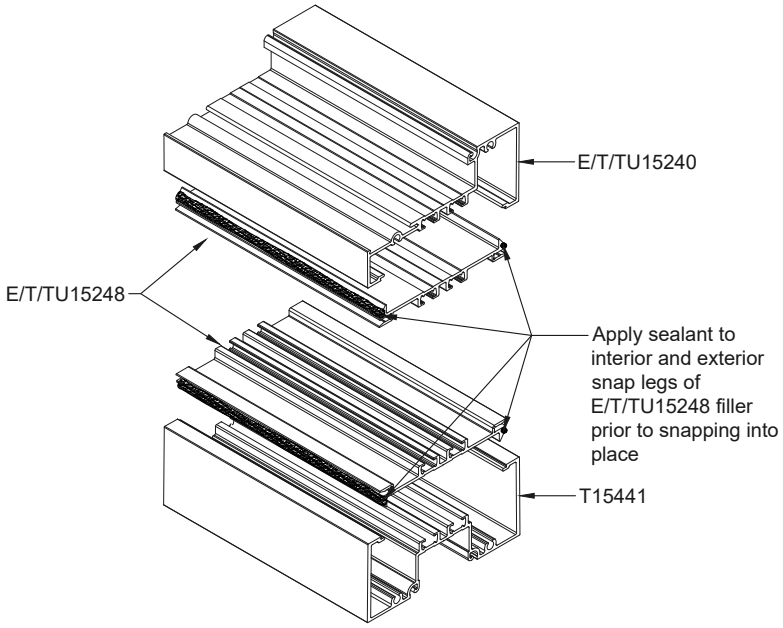

FIG. 1.

Step 12: Optional High Sidelite Bases (Continued)

I. Attach a snap cover or brake metal to the inside surface of the sidelite base. **SEE Fig. 1**.
J. From the exterior, seal joints between the snap cover and vertical members. **SEE Fig. 2**.
K. Attach a snap cover or brake metal to the exterior. **SEE Fig. 2**.

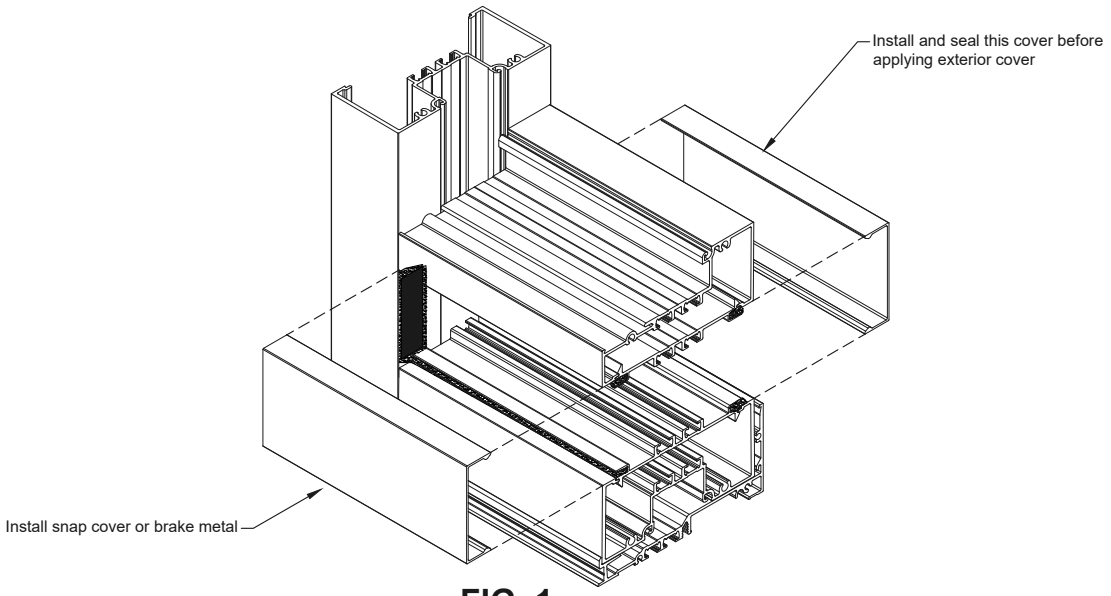

FIG. 1.

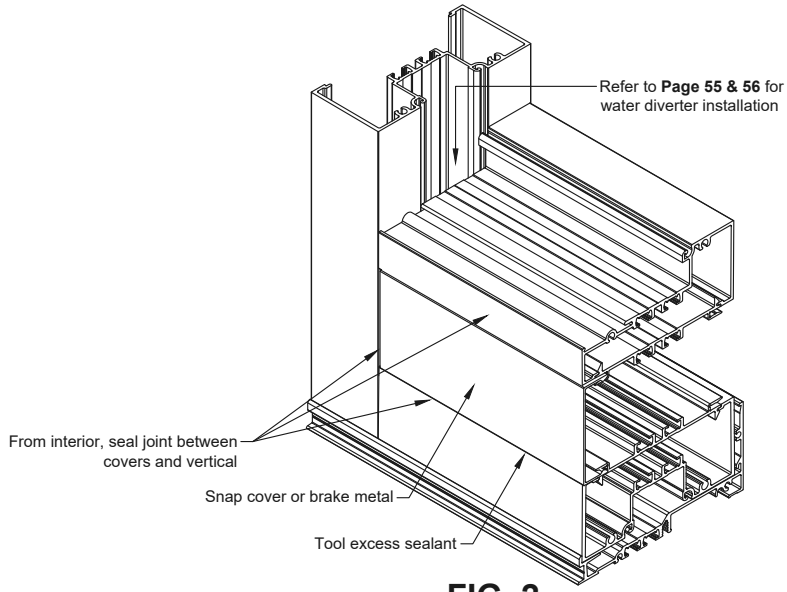

FIG. 2

Step 12: Optional High Sidelite Bases (Continued)

I. Attach a snap cover or brake metal to the inside surface of the sidelite base. **SEE Fig. 1**.
J. From the exterior, seal joints between the snap cover and vertical members. **SEE Fig. 2**.
K. Attach a snap cover or brake metal to the exterior. **SEE Fig. 2**.

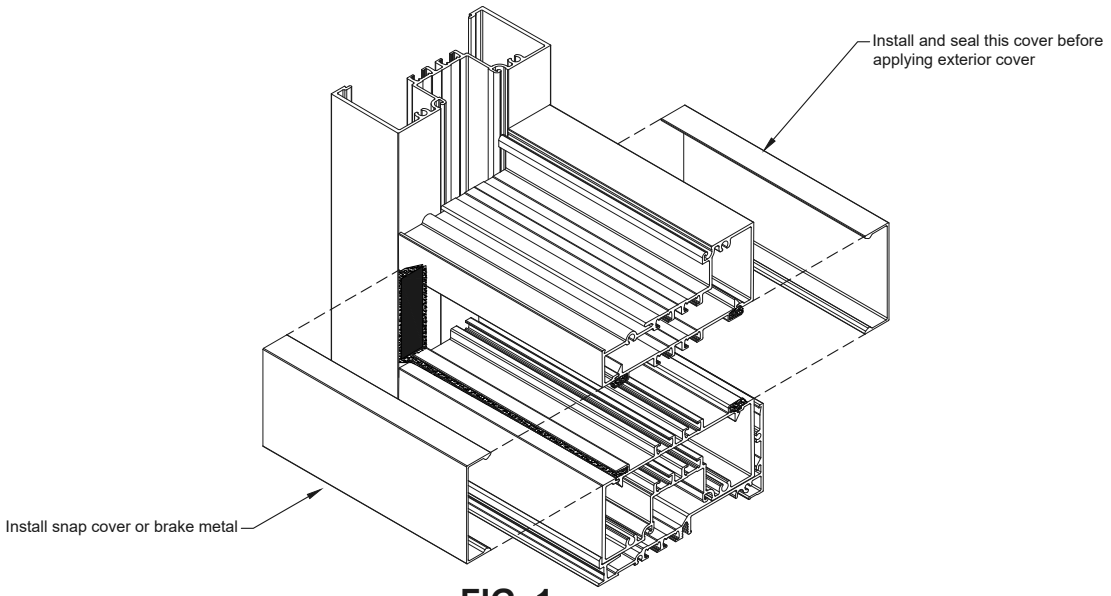

FIG. 1.

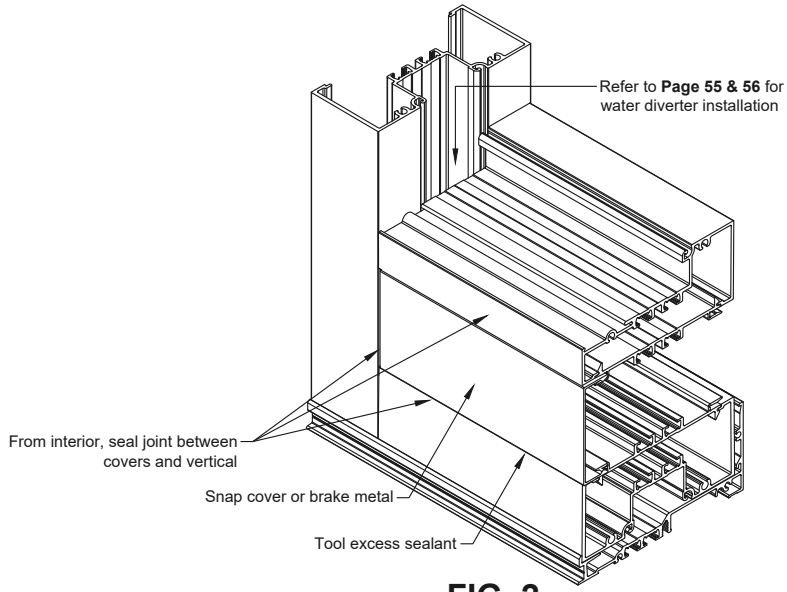

FIG. 2

Step 13: Optional Sidelight Base

A. Install P4563 snap-in filler at bottom of vertical.
B. Install backer rod in vertical pocket at top of P4563. Seal over to avoid water penetration into vertical.
C. Drill for and attach P1137 clip as shown.
D. Fabricate (2) $\frac{1}{4}$" (6.3mm) diameter weep holes in E14027.
E. Fabricate anchor holes in E14027 as described in approved shop drawings.
F. Install E14027 sidelite base anchor shoe into full bed of sealant and seal ends.
G. Slide E14026 sidelite base over anchor shoe and clip.
H. Fasten to clips with (2) #10 FH UC screws at each end.
I. Apply a continuous bead of sealant at interior snap receiver.
J. Snap-in interior stop.
K. Install setting blocks, interior gaskets and glaze.
L. Install gasket in exterior glass stop and snap in place.

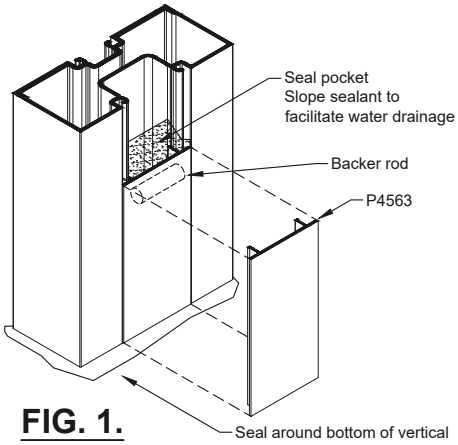

FIG. 1.

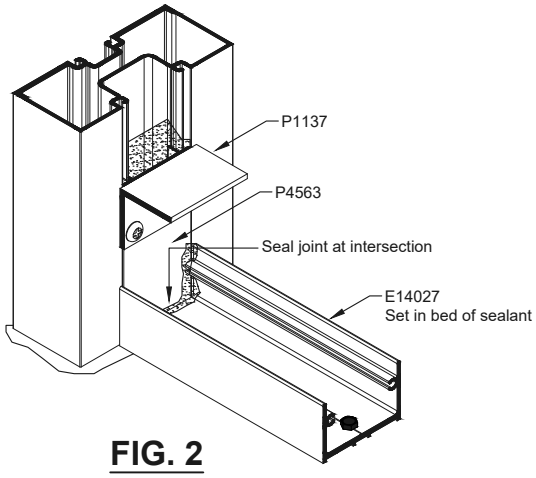

FIG. 2

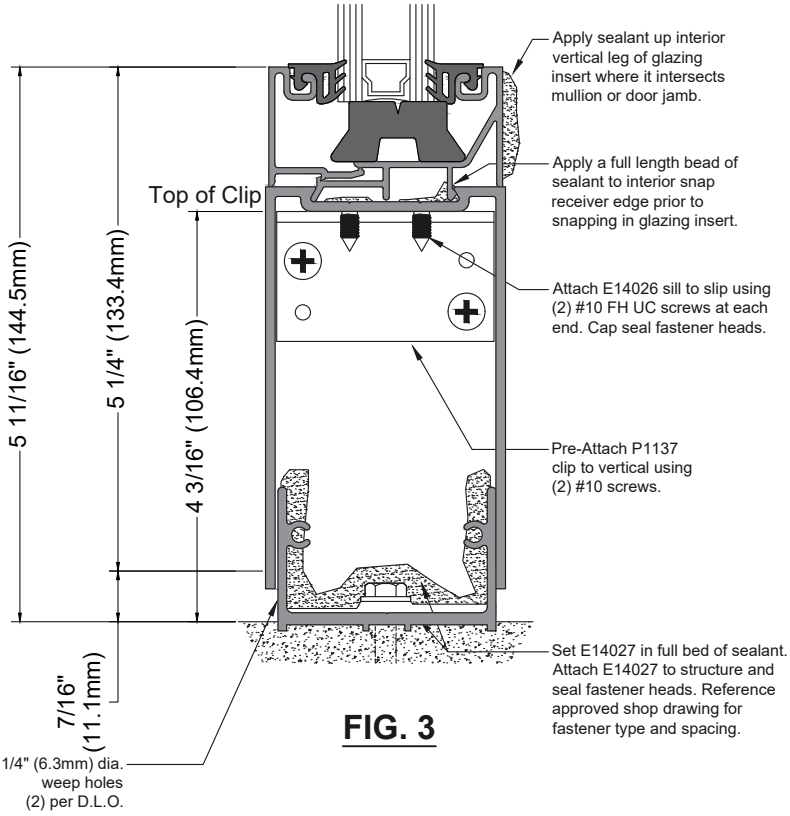

FIG. 3

FRAME ASSEMBLY

Step 14: Assemble Frames

Screw Spline Assembly

A. Clean all mating surfaces on horizontal & vertical.
B. Apply sealant to ends of the head, horizontal and sill members prior to attaching to the vertical members. **SEE Fig. 1**.
C. Attach head, horizontal and sill members to the vertical and closure pocket members with S204 frame assembly screw.
D. Tool sealant at each joint.

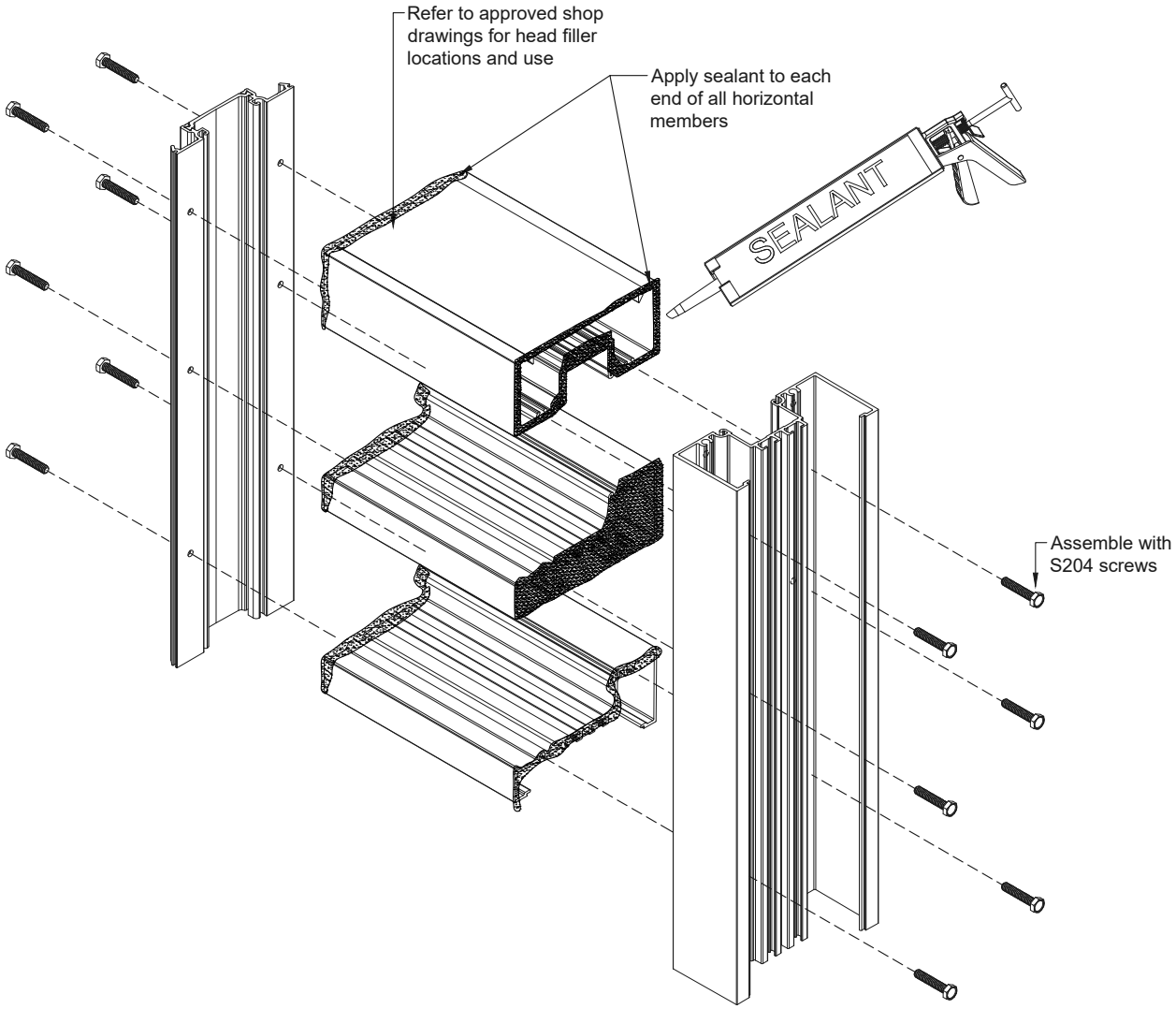

FIG. 1.

FRAME ASSEMBLY

Step 14: Assemble Frames (Continued)

Shear Block Assembly

A. Install shear blocks onto vertical and closure pocket members with S009 #10 x 1 $\frac{3}{4}$" PH screw as shown in **Fig. 1**.
B. Clean all mating surfaces on horizontal, vertical and shear block.
C. Apply sealant to ends of the head, horizontal and sill members and to perimeter of shear blocks prior to attaching the horizontal members to the vertical members. See **Fig. 2**.
D. Install head, horizontal and sill members over the shear blocks.
E. Match drill tap hole in head shear block with drill #14 (.182"(4.623mm) dia) for #12 screw.
F. Match drill tap hole in horizontal and sill shear blocks with drill #23 (.154"(3.912mm) dia) for #10 screw.

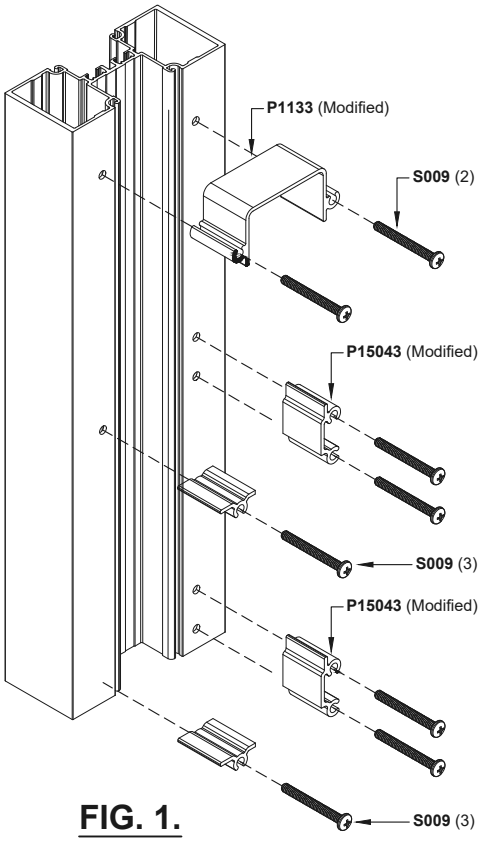

FIG. 1.

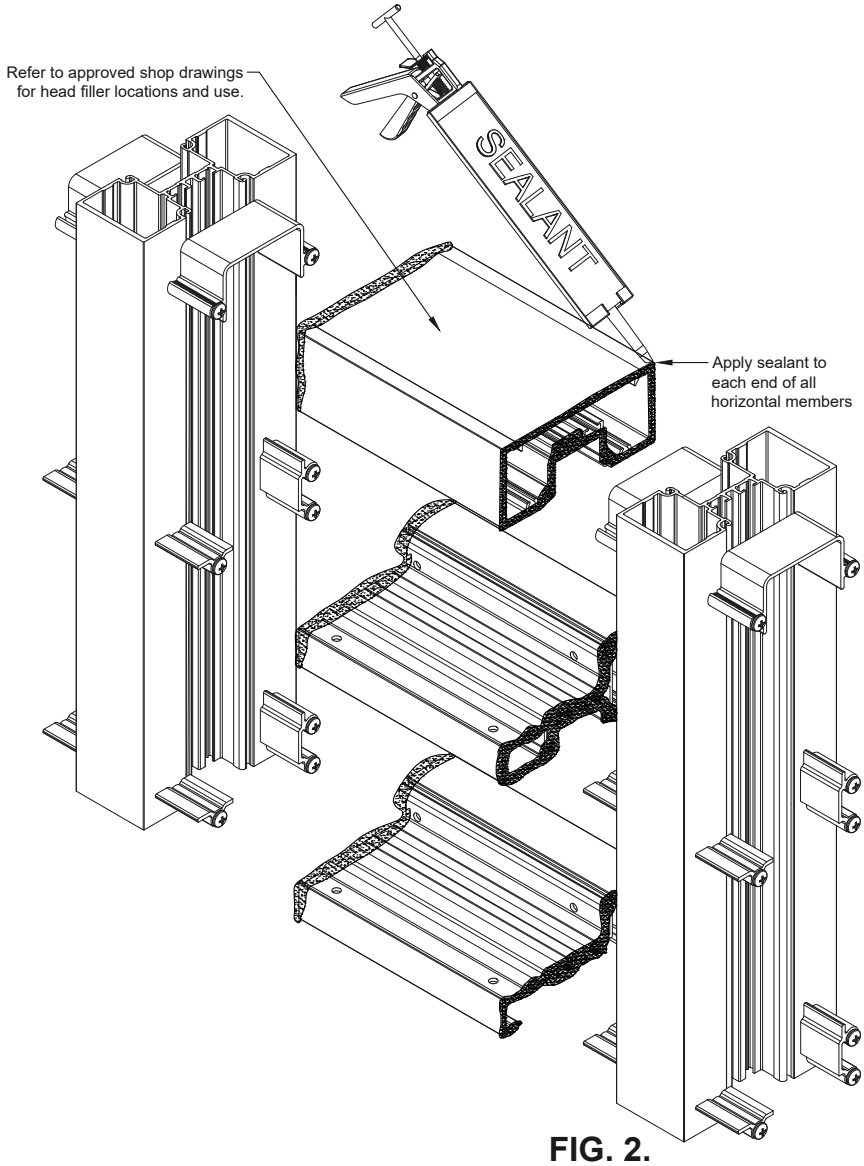

FIG. 2.

Step 14: Assemble Frames (Continued)

Shear Block Assembly (Continued)

G. Secure head member to shear block with (1) S149 #12 x $\frac{3}{4}$" FH screw. Secure horizontal and sill members with (2) S191 #10 x $\frac{1}{2}$" truss head screw. See **Fig. 1**.
H. Cap seal heads of screws at horizontal and sill members.

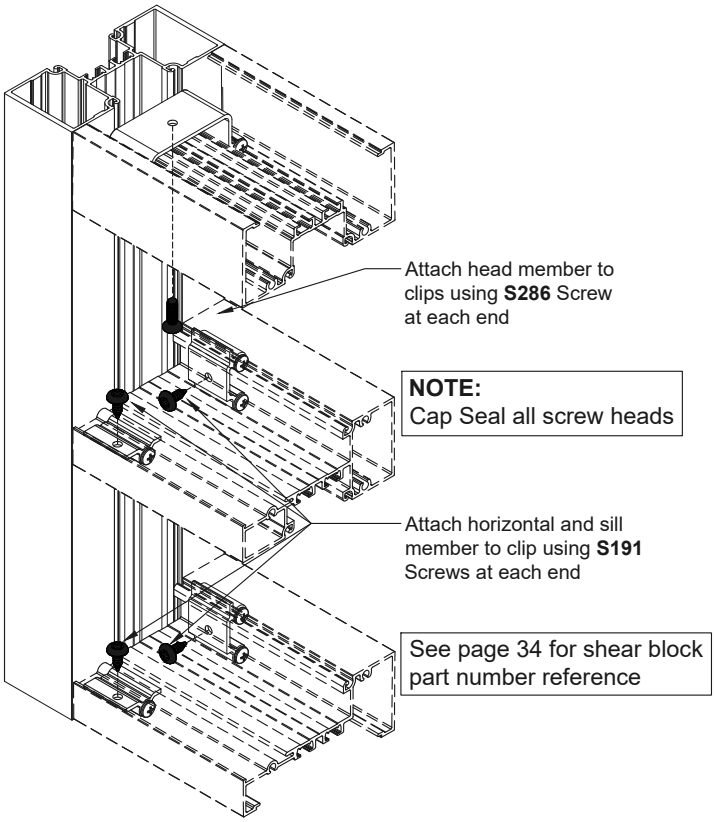

FIG. 1.

FRAME ASSEMBLY

INSIDE GLAZING GUIDELINES

For inside glazing applications, refer to **Fig. 1** for screw spline assembly and **Page 48 Fig. 1** for shear block assembly. Follow standard instructions for fabrication, assembly and glazing of inside glazed applications.

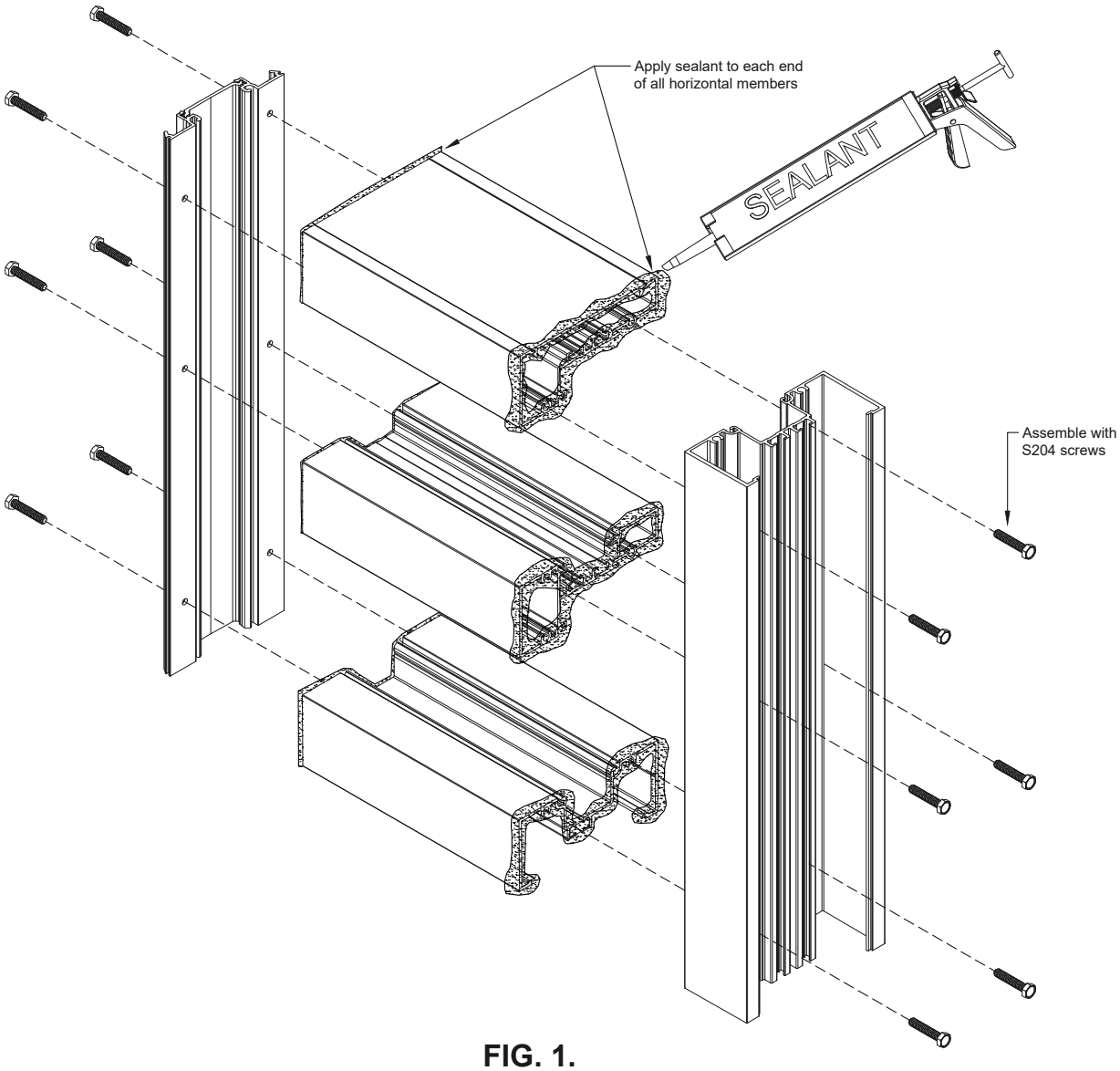

FIG. 1.

FRAME ASSEMBLY

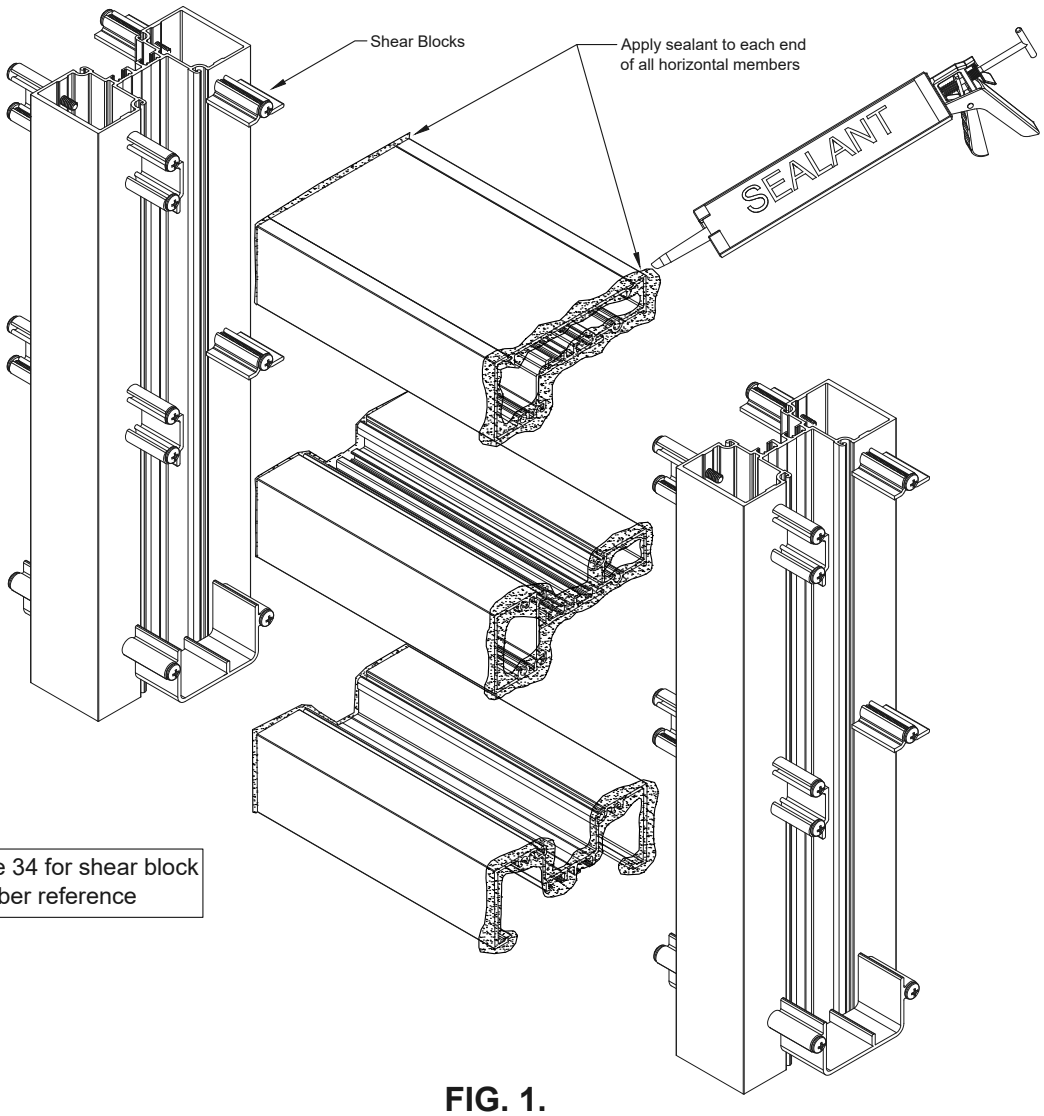

See page 34 for shear block part number reference

FIG. 1.

FRAME INSTALLATION

Step 15: Install Sill Flashing (If required)

A. Center the sill flashing in the opening. If sill flashing is spliced, be sure the joint at the jamb is per approved shop drawings (jamb caulk joint minus $\frac{1}{8}$"(3.2mm)). **If there is an entrance door in the opening, leave a gap in the sill flashing for the door frame to be installed and refer to Step 18, page 53 for sealing instructions.** Splice joint to be $\frac{3}{8}$"(9.5mm) minimum.

B. At the highest point of the sill (smallest rough opening height), shim the sill flashing with a minimum $\frac{1}{4}$"(6.3mm) shim space. Sill flashing must be installed level side to side and front to back.

C. Shim tight between the sill flashing end dam and building condition to ensure end dam is not dislodged during frame installation. Remove shim after frames are set in place.

D. Anchor sill flashing to building substrate per approved shop drawings. Cap seal anchors after installation. Where the sill flashing abuts a door jamb, the sill flashing anchor must be located within 6"(152.4mm) of the door jamb.

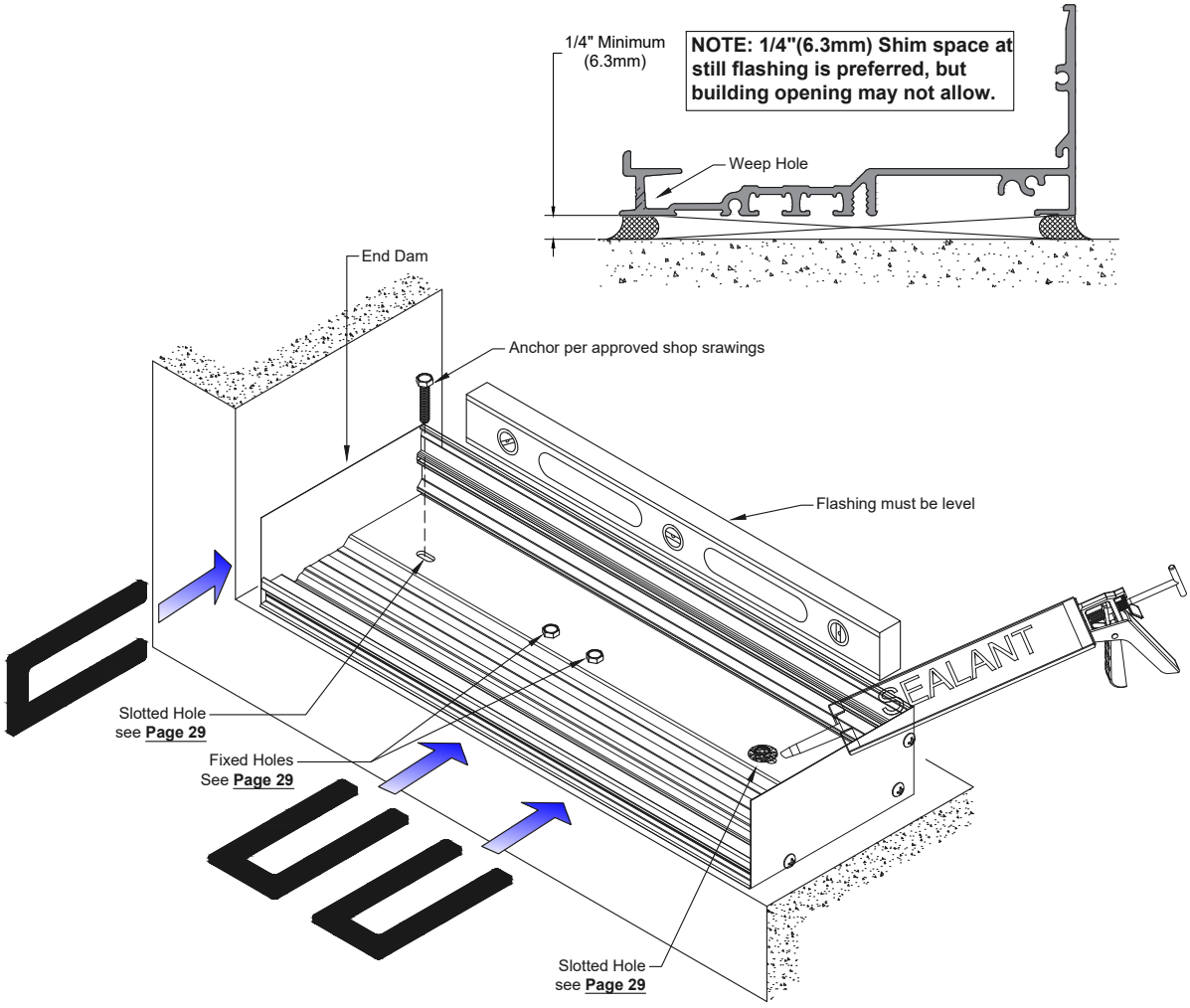

FIG. 1.

Step 16: Sill Flashing Splice

Continue installing sill flashing per Step 12 across the opening.

A. Lay P3444 silicone sheet into sill flashing at splice location (center of D.L.O.) and cut to length.
B. Install backer rod under the sill flashing at the splice joint.
C. Clean surfaces where splice will be applied. Apply sealant as shown in **Fig. 1**.
D. Set silicone splice sleeve in place and tool sealant. Seal front and back joints.
E. Do not locate a splice directly below a vertical mullion. Center line of D.L.O. is preferred.

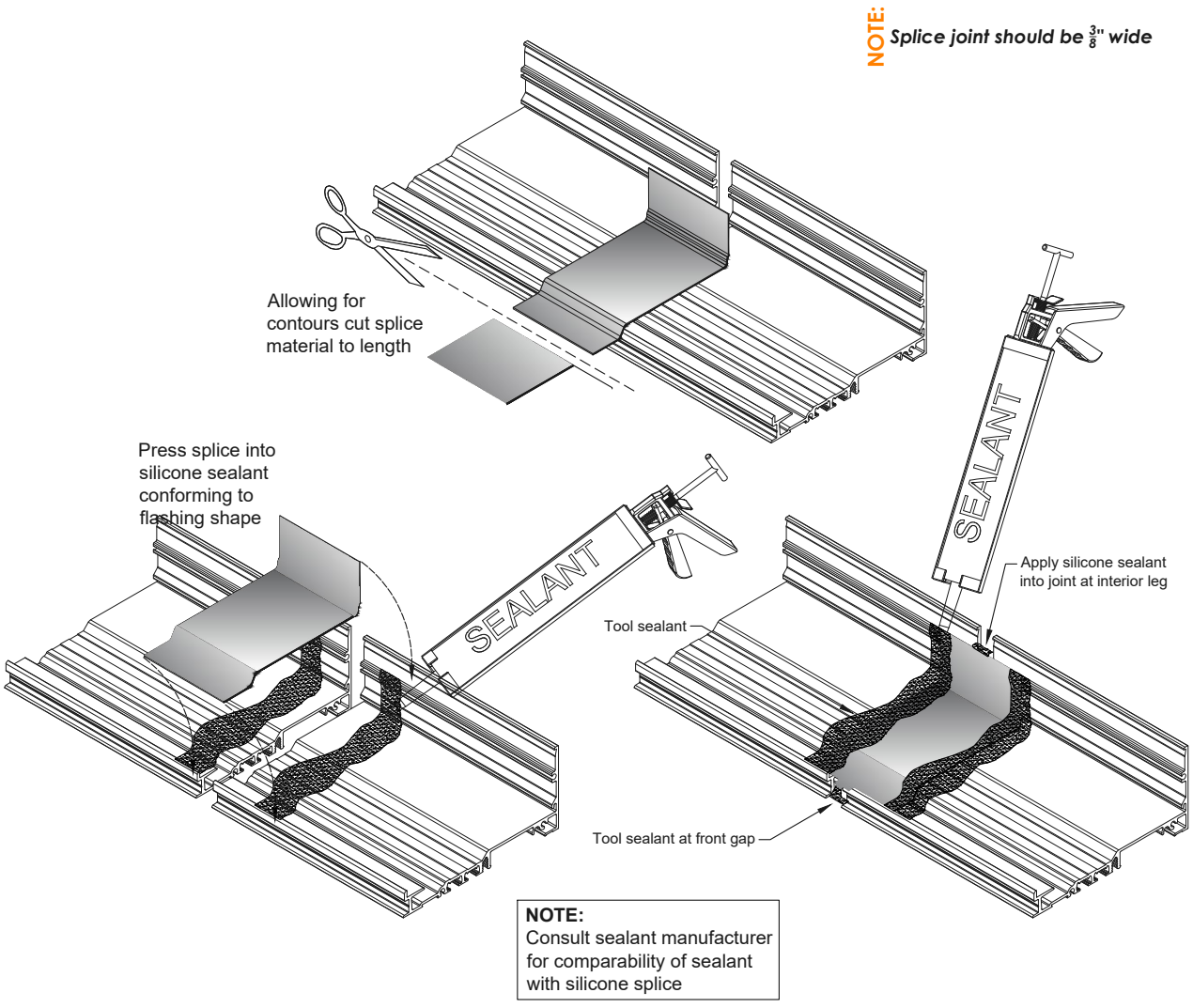

FIG. 1.

FRAME INSTALLATION

Step 17: Install Frames

A. Starting on one side of the opening, apply a bead of silicone to the back of the sill flashing and the end dam prior to installing each frame. Apply a sealant bead on the back of the flashing only for the frame to be installed.
B. Lift the first frame onto the sill flashing, snug against the end dam.
C. Lift each frame onto the sill flashing and engage with the previous frame.
D. Check to ensure frame is plumb, level and jamb caulk joint is per approved shop drawings.
E. Install P2901 wedge gasket into the flashing along the length of the frames
F. Shim head and jamb at anchor points and attach to the building structure. Size, quantity and location of anchors are per approved shop drawings. Remove shims between sill flashing end dams and secure before proceeding.
G. When the frame is anchored to the structure, apply the exterior perimeter seal at the head, sill and jambs. Interior perimeter seal must be applied to the head, sill and jambs.

NOTE: When using P2474, make sure clearance holes are made in the snap-in filler to avoid the sill flashing anchors.

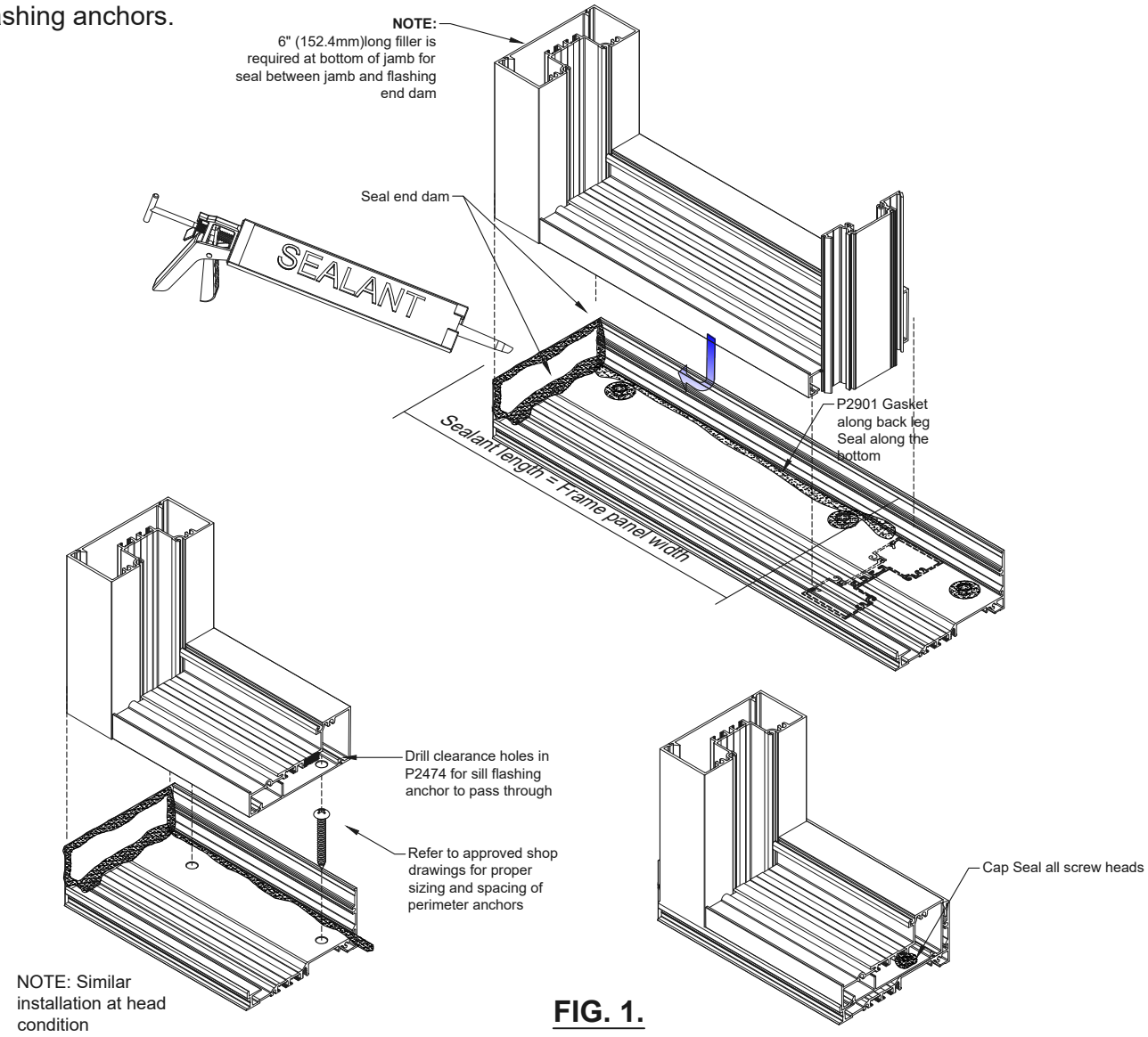

FIG. 1.

Step 17: Install Frames (Continued)

Frame installation when using the optional T14055 sill flashing.

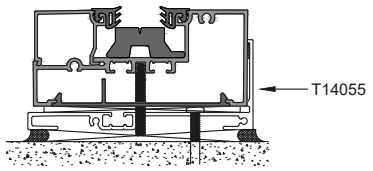

G. Install frame units as directed in steps A and B on page 51.
H. Push frame tight to vertical leg of sill flashing and match drill through sill anchor holes into sill flashing. See **Fig. 1**. Sill anchor not by Tubelite and is to be sized according to project loading requirements.
I. Shim between sill and flashing centered on anchor. See **Fig. 2**.
J. Inject sealant into anchor hole to cover hole in flashing. See **Fig. 2**.
K. Apply sealant to threads of fastener and secure frame to sill flashing. See **Fig. 3**.
L. Cap seal all fastener heads. See **Fig. 4**.

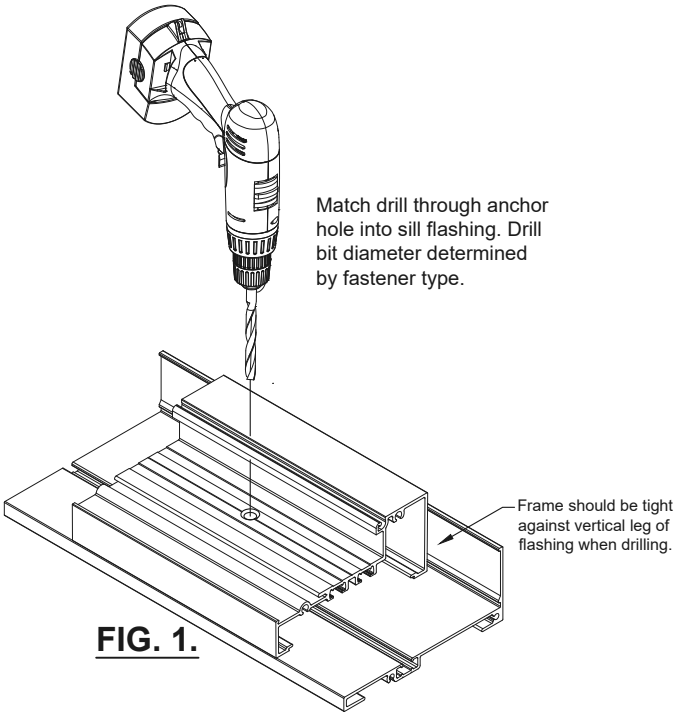

FIG. 1.

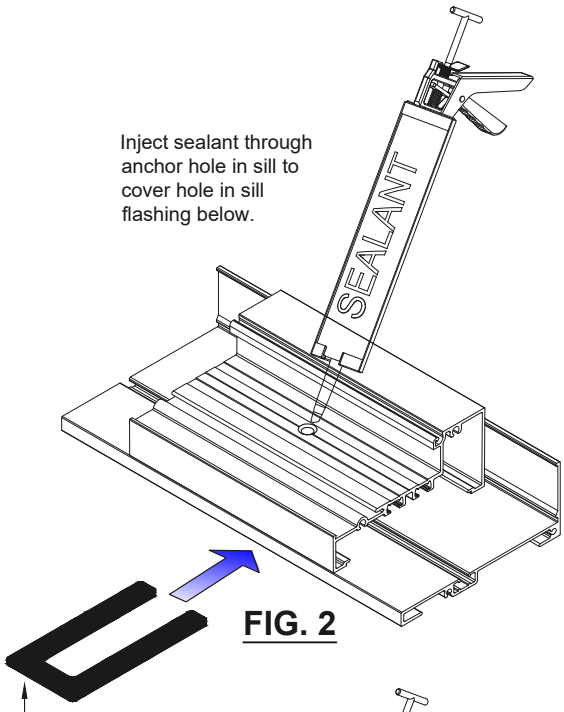

FIG. 2

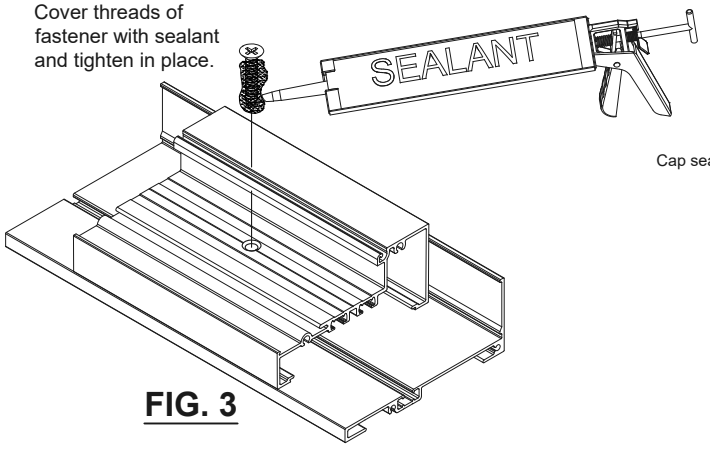

FIG. 3

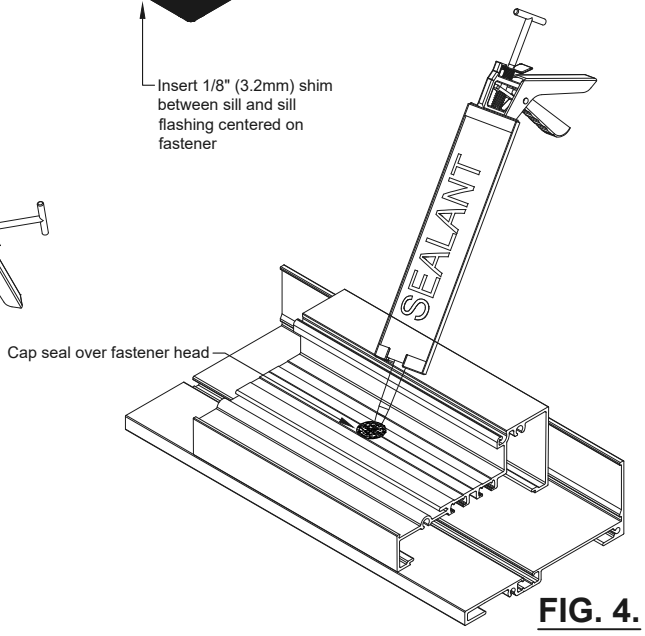

FIG. 4.

Step 18: Sealing Sill Flashing at Door Jamb

A. Install door frame into the opening where sill flashing is discontinued.
B. Seal the bottom of the door jamb mullion to the building substrate and to the sill flashing.
C. Fill the door jamb cavity completely and marry to the sill flashing.

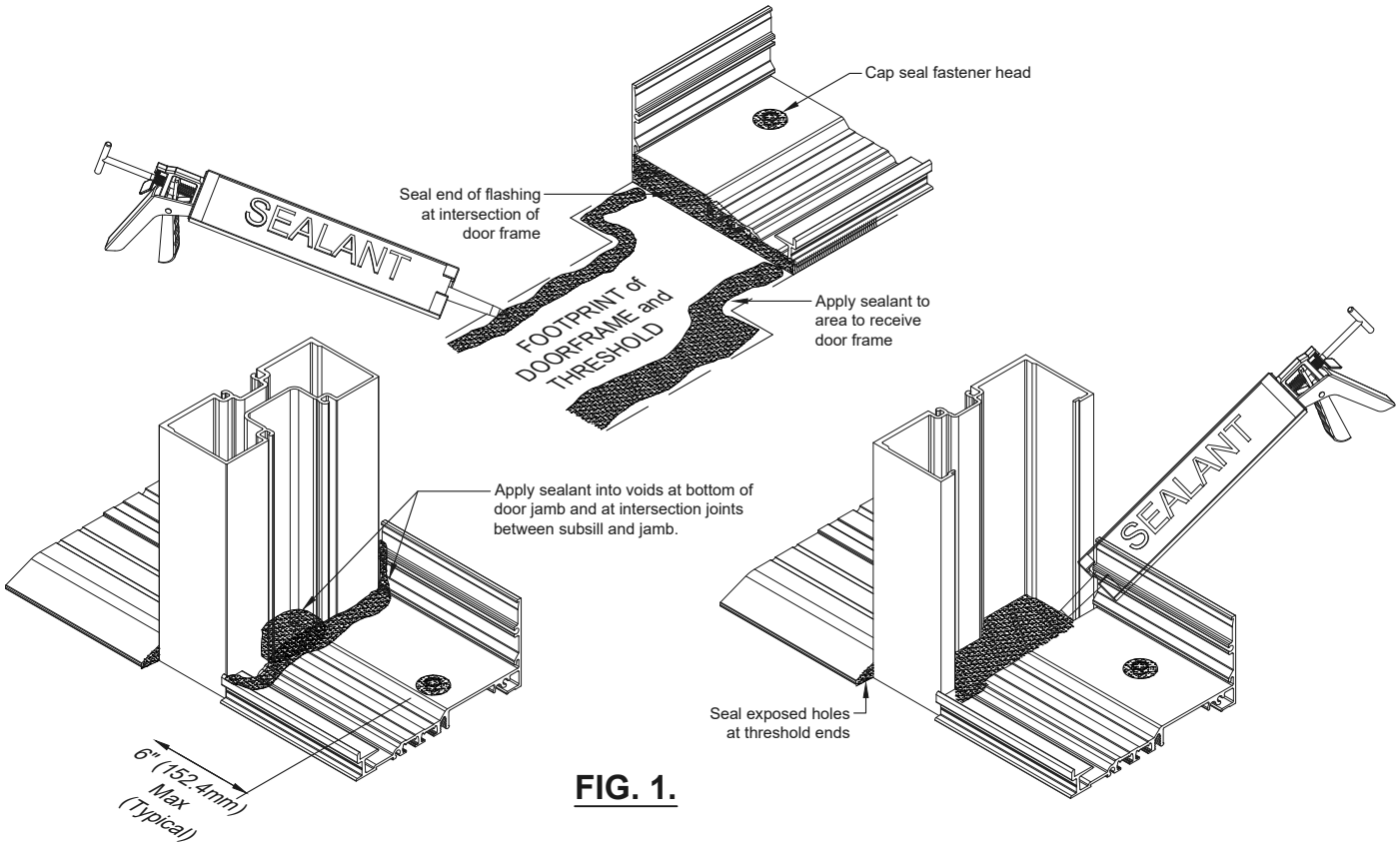

FIG. 1.

NOTE:
When a 'Knee Wall' occurs within an elevation, the sill flashing must be sealed to intersecting vertical members as shown in **FIG. 2**

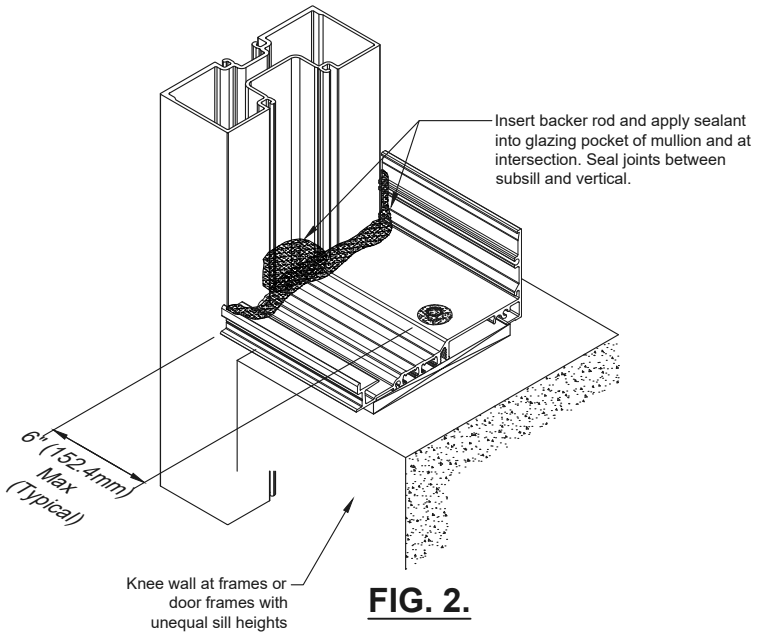

FIG. 2.

Step 19: Glazing Preparation

A. Remove any debris from the glazing pockets.
B. Trim excess silicone from edges of glazing units to allow for maximum glazing clearance.

Glazing pockets are designed to accept IGU's up to and including 1-1/8" (28.6mm) thick. Refer to our online details for a full list of glazing size options for this system.

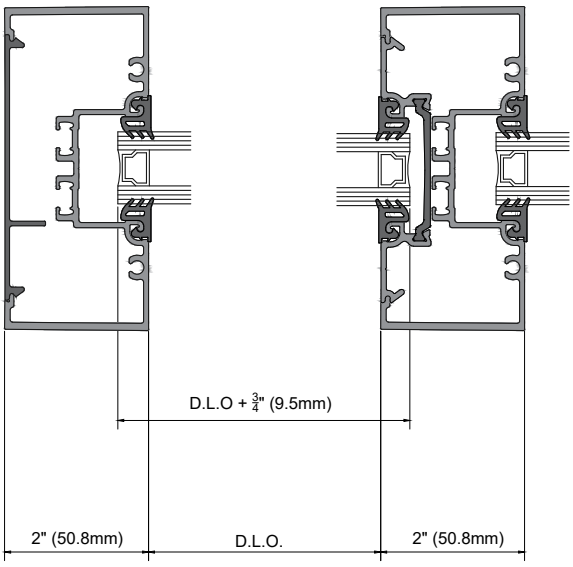

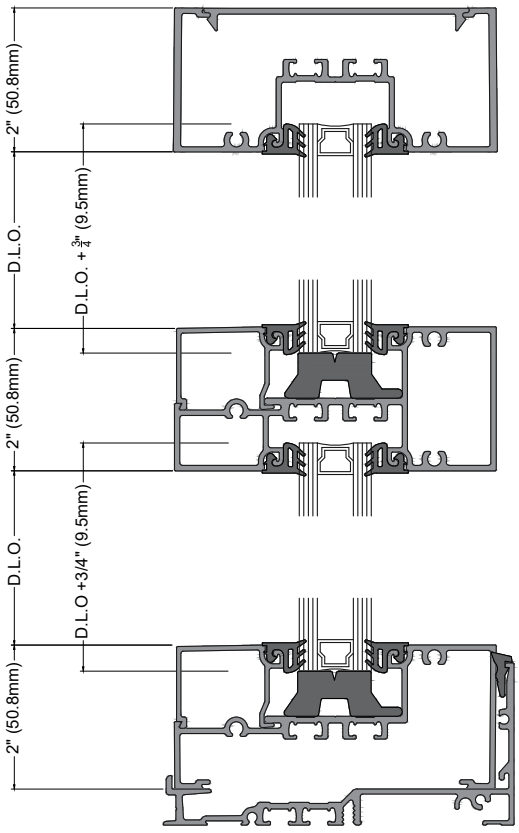

FIG. 1.
GLASS LITE SIZES

Step 20: Installing the Glazing Units

NOTE: Glazing must be done from bottom of frame up.

A. Seal the corners of the previously installed gaskets (refer to Step 22, page 57.).
B. Set the glass by installing into the deep pocket of the vertical first, then carefully sliding into the shallow pocket. Set glass onto (2) setting blocks located at quarter points or per approved shop drawings. Consult glass manufacturer if glass size exceeds 40 sq. ft. (3.72 sq.m)
C. In applications where glass shifting is anticipated through seismic activity or other forces acting on the frame, install P1917 anti-walk blocks into the deep pocket side of the vertical per glazing manufacturer recommendations.
D. Install remaining gaskets on the vertical sides of the glass, holding back at the bottom to allow for glass stop installation.
E. Install glass stop at the bottom of the lite.
F. Pump sealant into glazing reglet 1" (25.4mm) away from each corner and the horizontal-to-vertical joint from the water diverter up to the glazing reglet.
G. Finish installing gaskets at top and bottom of D.L.O.
H. Repeat steps 20 A-G for the remaining row of lites.
I. Prior to glazing the next row of lites, install water diverter P1165 at ends of intermediate horizontals. See **Fig. 1**.

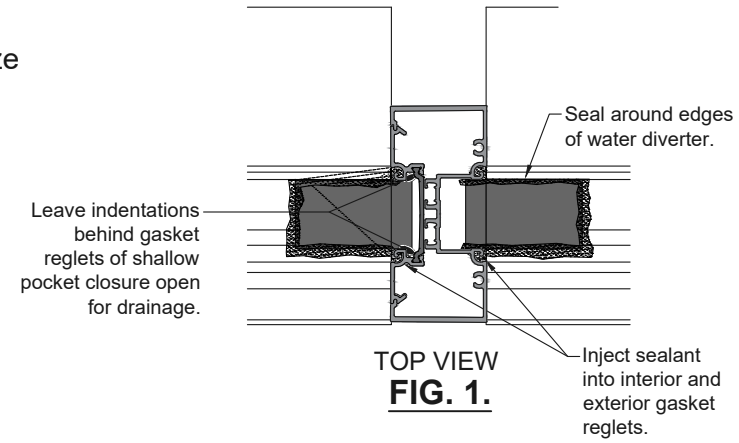

TOP VIEW
FIG. 1.

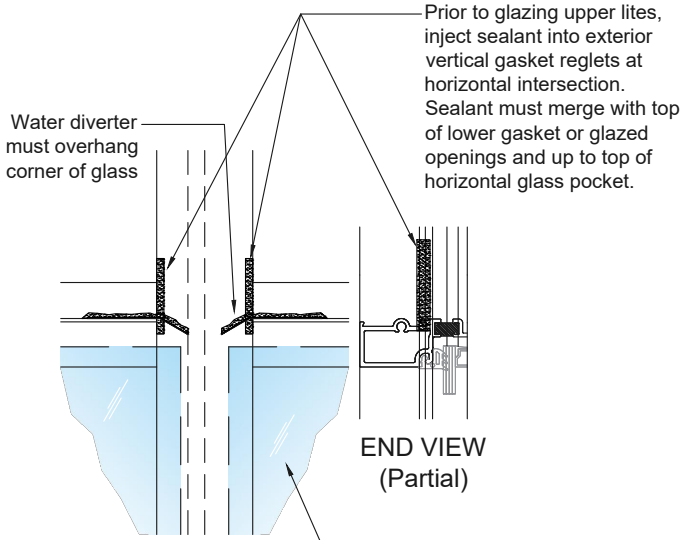

FRONT VIEW
FIG. 2

NOTE: **Position water diverter to cover glass corner.** Seal diverter to horizontal, leaving the gap at the front and side open in the vertical glazing pocket. See **Fig. 1 & 2**. (Also see isometric details on page 56)

Step 21: Installing the Glazing Units (Continued)

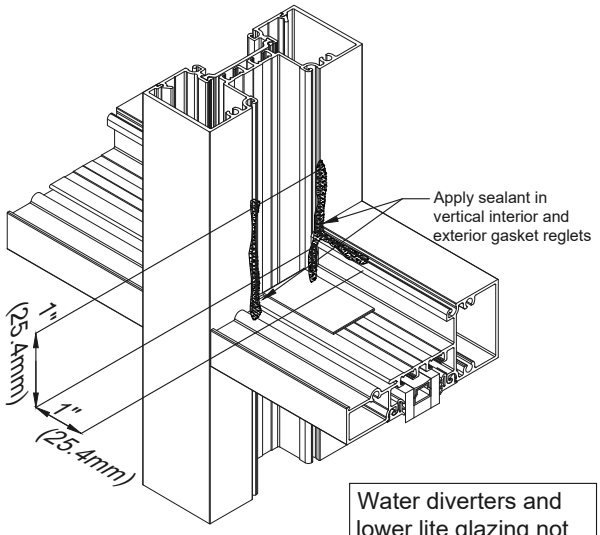

Water diverters and lower lite glazing not shown for detail clarity

FIG. 1

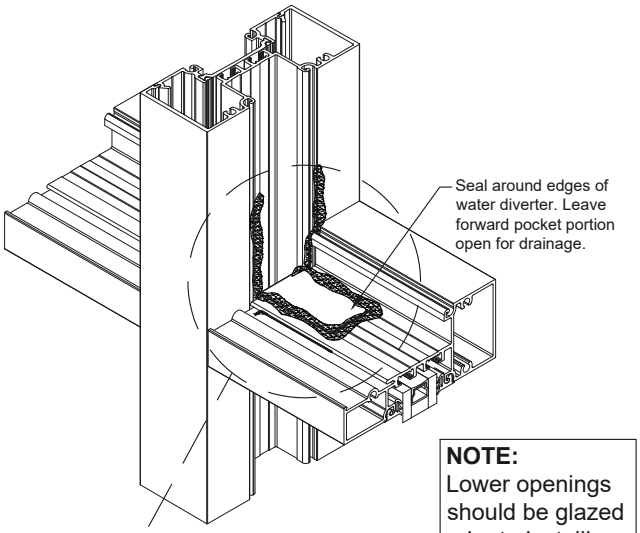

FIG. 2

NOTE:
Lower openings should be glazed prior to installing water diverters in upper openings.

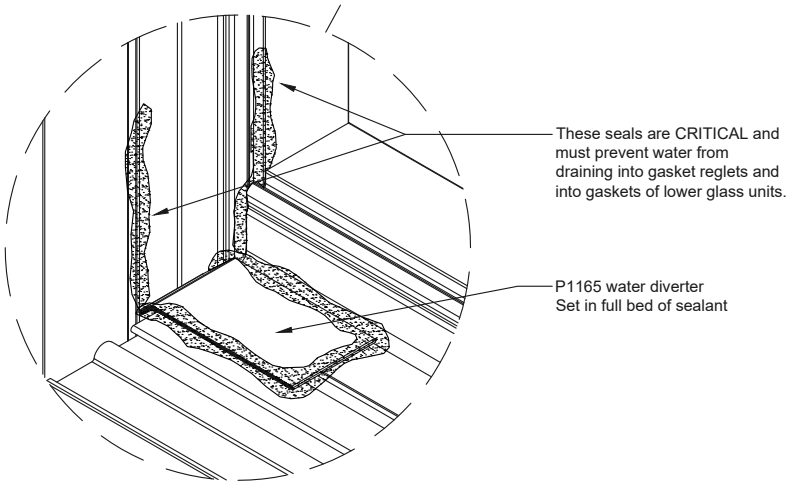

FIG. 3

Step 22: Install Gaskets

A. Install glazing gasket on one side of the framing member, depending upon direction of glazing.

1. For inside glazing, install gaskets on exterior side of framing first.
2. For outside glazing, install gaskets on interior side of framing first.

DO NOT STRETCH GASKETS WHEN INSTALLING. Start at the center of D.L.O. and work towards the ends.

Allowance = $\frac{1}{8}$"(3.2mm) extra length per foot of D.L.O.

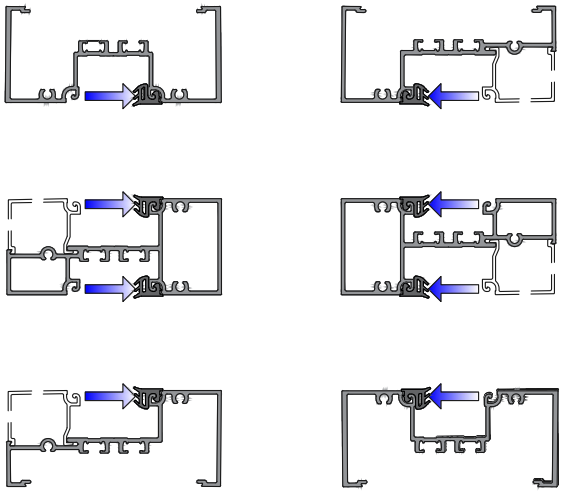

OUTSIDE GLAZE INSIDE GLAZE

FIG. 1.

IMPORTANT NOTE: Clean ends of gaskets with IPA prior to sealing the corners.

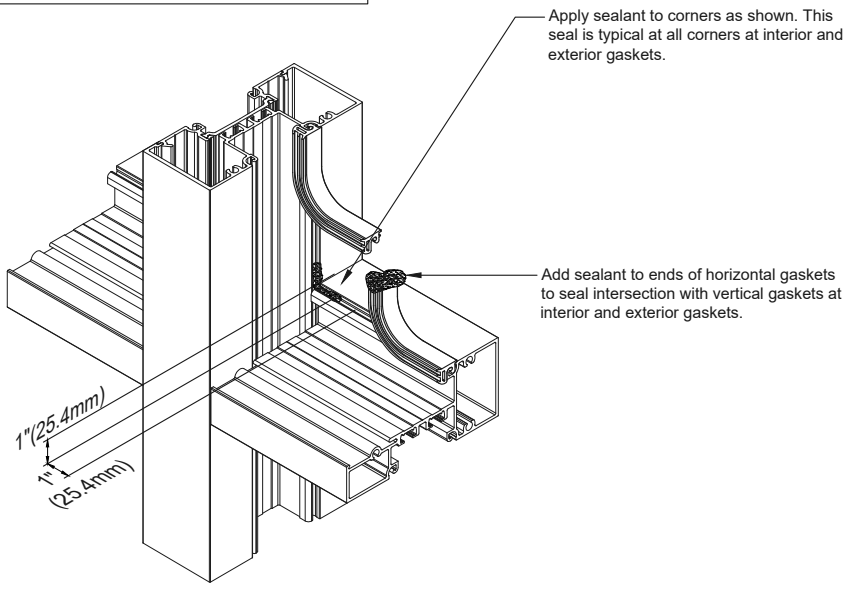

FIG. 2

OPTIONAL GLAZING REDUCER

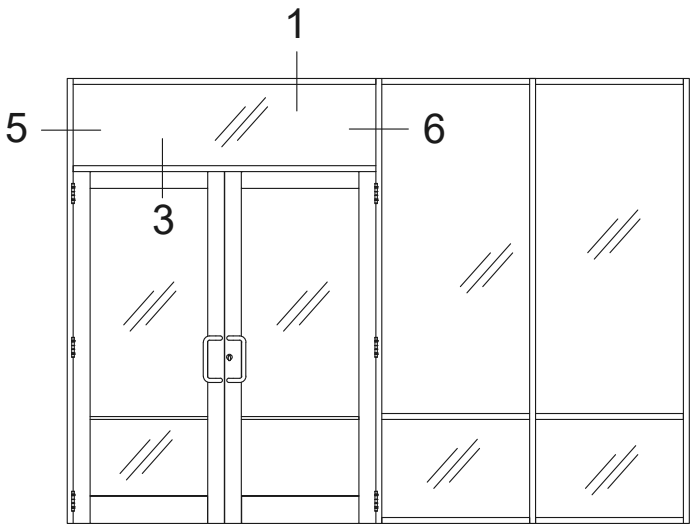

Step 1: Glazing Reducer Installation

A. Use E15036 or E15061 reducers if needed for thinner infill. See details at bottom of page.
B. It is recommended to slide reducer into header prior to frame assembly.
C. It is recommended to slide reducers into door header and jamb snap in gutter stops prior to installing into transom.
D. Add sealant to each end. See Figure 1.

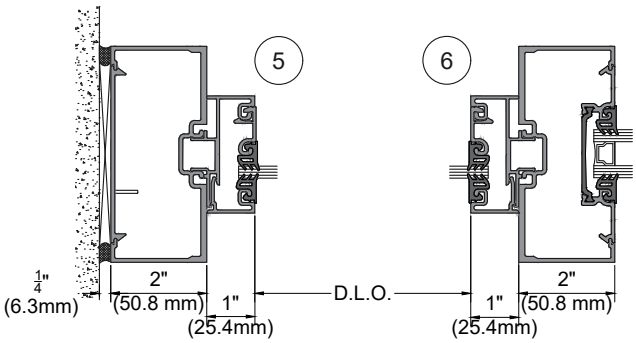

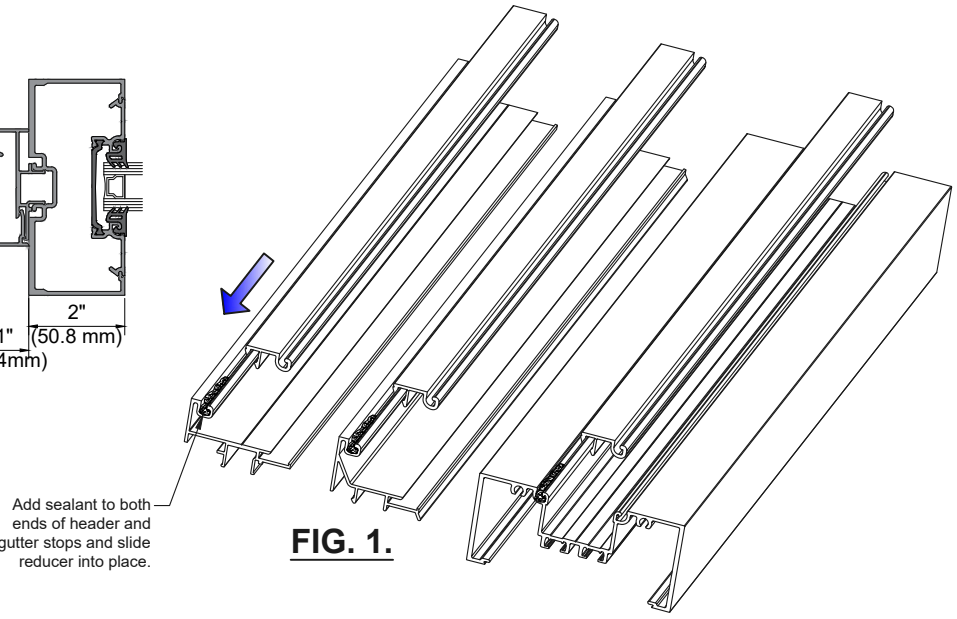

FIG. 1.

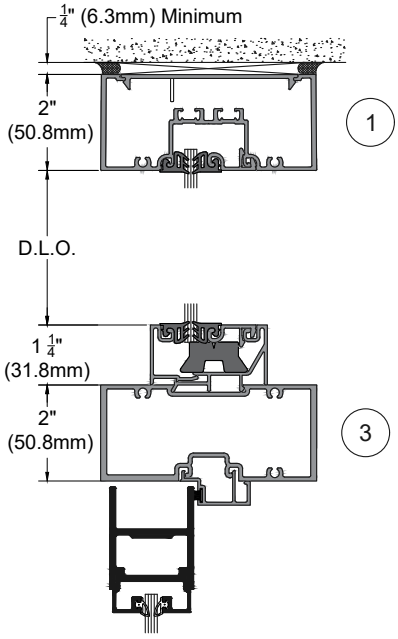

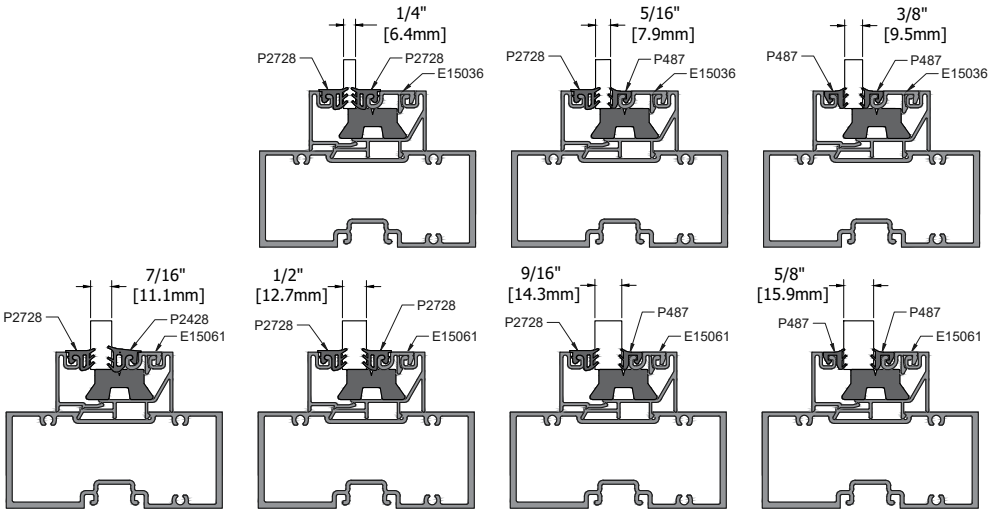

OPTIONAL ROTATIONAL MULLIONS

Step 1: Sill Flashing Fabrication & Installation

A. Determine cut length of the sill flashing at the splayed condition. See **Fig. 1**. The sill flashing is mitered and butt tight at the corner.
B. Install flashing per instructions in Step 11, page 39. Anchor the sill flashing to the building substrate each side of the corner. Seal heads of fasteners.
C. Seal entire miter joint at sill flashing, tooling the sealant over the joint. See **Fig. 2**.

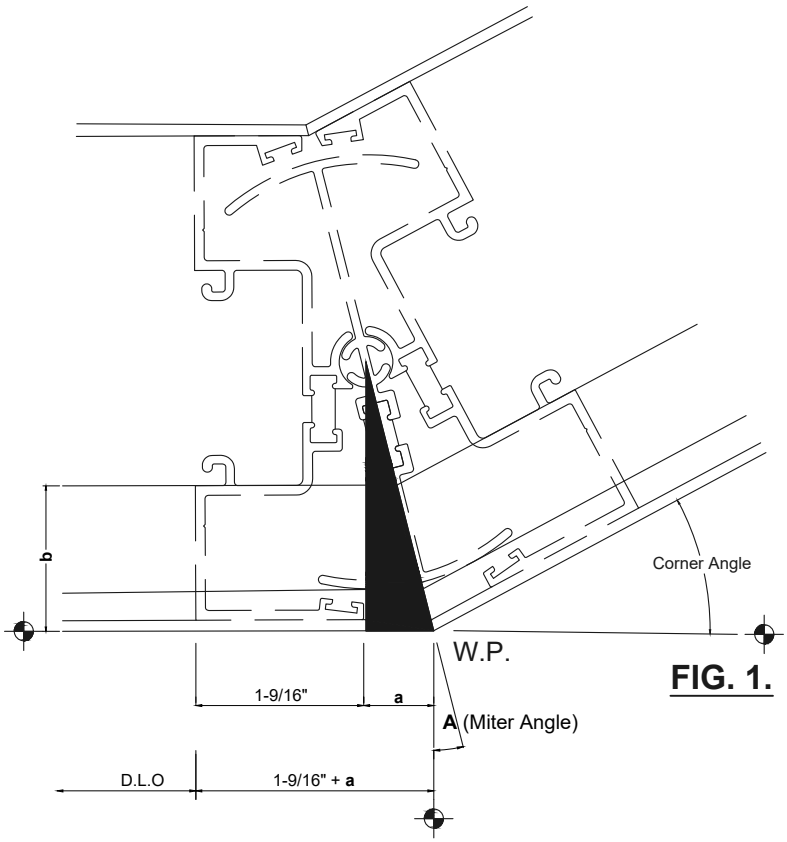

FIG. 1.

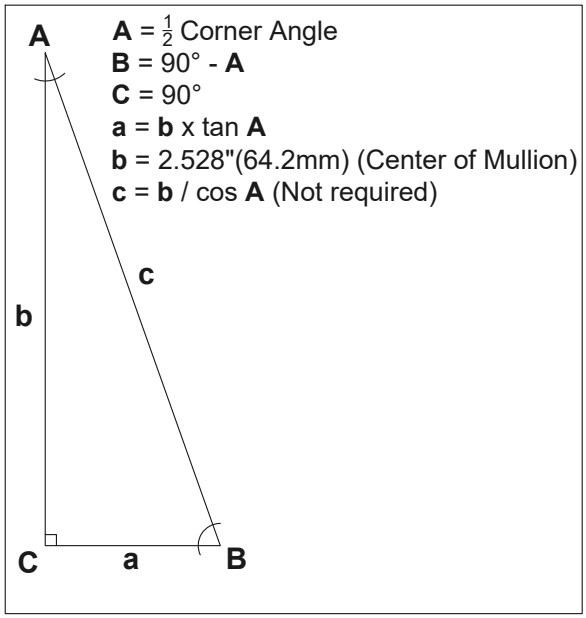

NOTE: If rotational mullion is utilized at only one corner on a frame in lieu of a splayed frame with many segments, Tubelite recommends splicing the sill flashing on either side of the corner as per typical corner conditions.

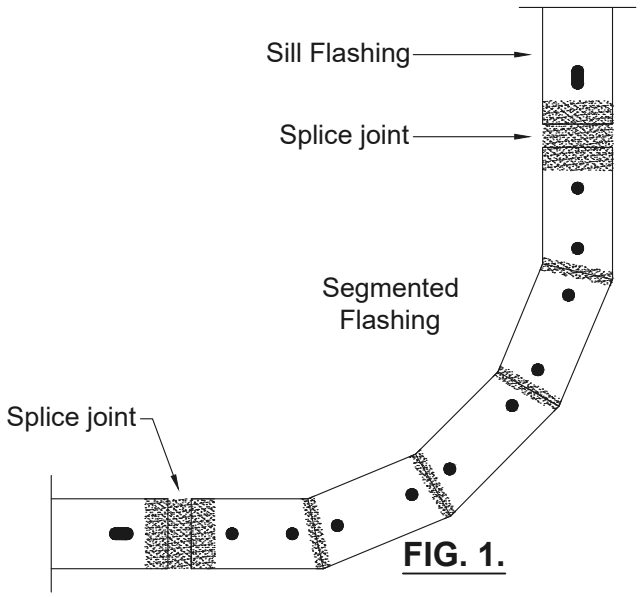

FIG. 1.

OPTIONAL ROTATIONAL MULLIONS

Step 2: Assemble Frames

A. Install inner rotational mullion (E14247 or T14247) onto the sill flashing.
B. Assemble frames on each side of the splayed condition. Make sure the wiper gaskets (P1221) are installed into the outer rotational mullions.
C. Set frames into the sill flashing and against the inner rotational mullion until they lock into place.
D. Once frame units are installed and in position, drill and countersink for #10 F.H. screw 6"(152.4mm) from end and 24"(609.6mm) on center. See **Fig. 1**.
E. Complete the installation per standard instructions within this manual.

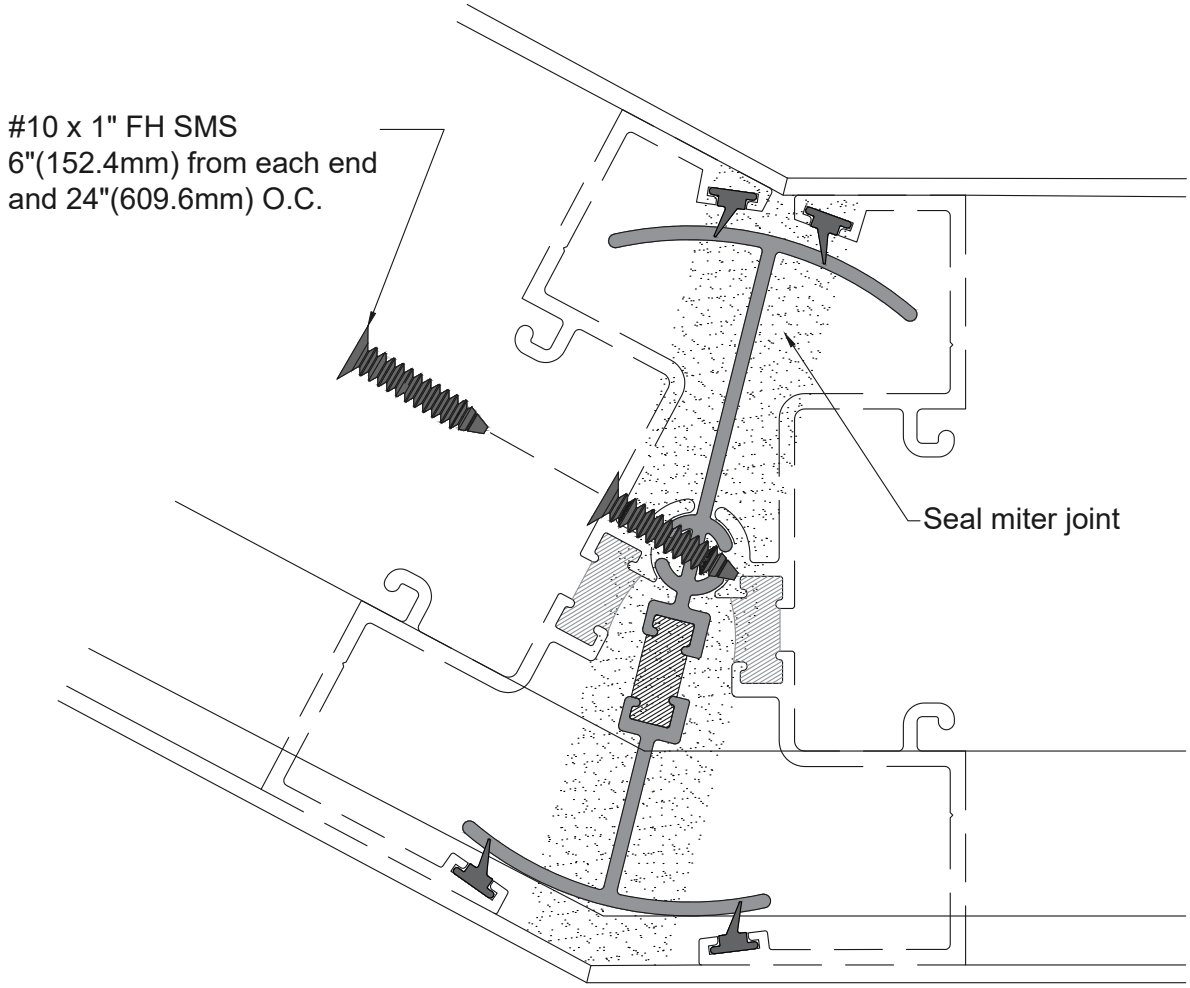

FIG. 1.