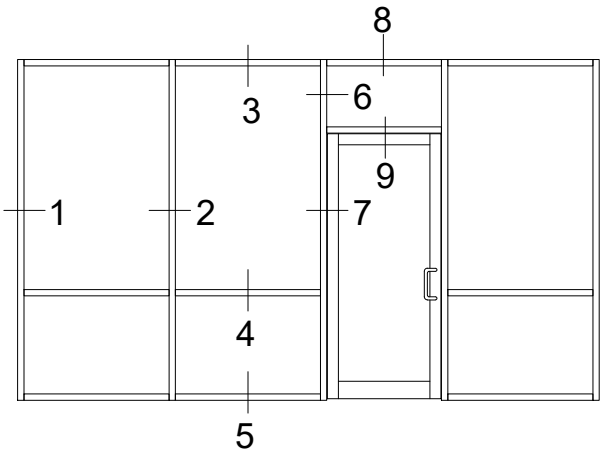

Tubelite reserves the right to change system configuration without prior notice when deemed necessary for product improvements.

Laws and building & safety codes governing the deswign and use of glazed entrance, window and curtain wall systems vary widely. Tubelite does not control the selection of product configurations, operating hardware or glazing materials, and assumes no responsibility thereof.

Standard Details

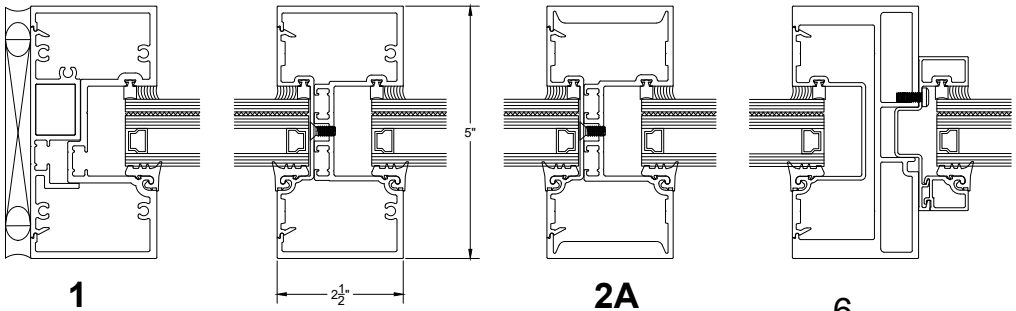

1 **2** **2A** 6

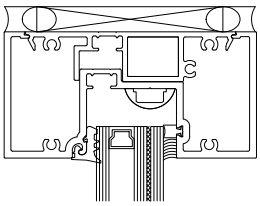

3

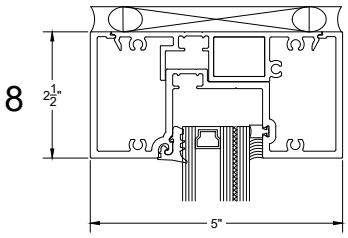

8

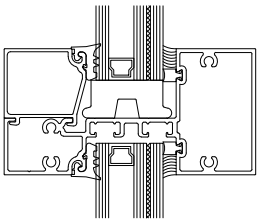

4

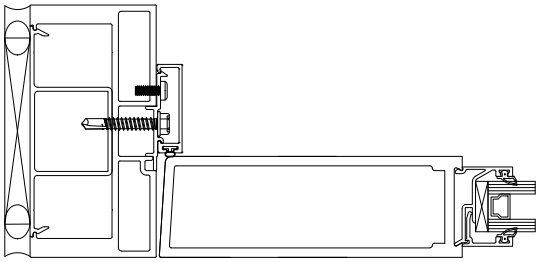

7

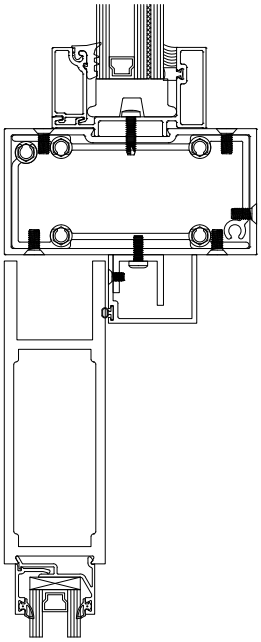

9

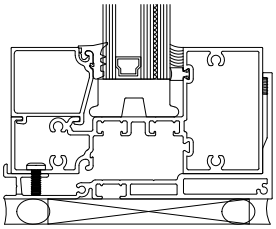

5

Standard Details
1/4 scale

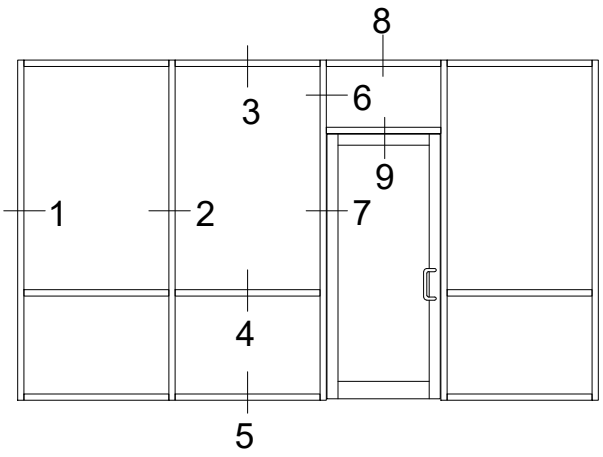

Tubelite reserves the right to change system configuration without prior notice when deemed necessary for product improvements.

Laws and building & safety codes governing the deswign and use of glazed entrance, window and curtain wall systems vary widely. Tubelite does not control the selection of product configurations, operating hardware or glazing materials, and assumes no responsibility thereof.

Standard Details

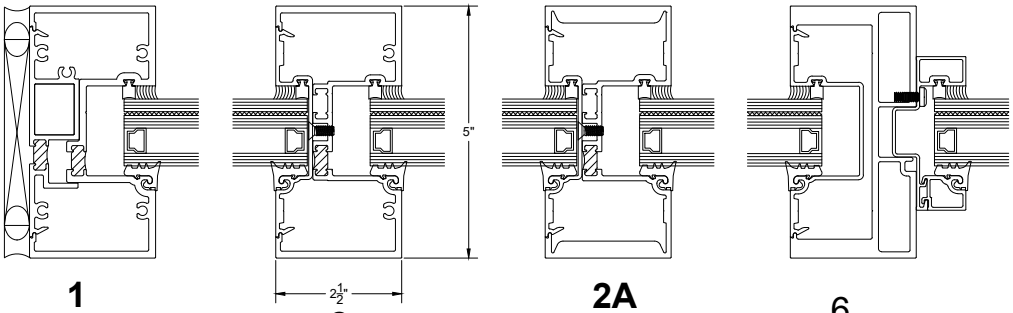

1 **2** **2A** 6

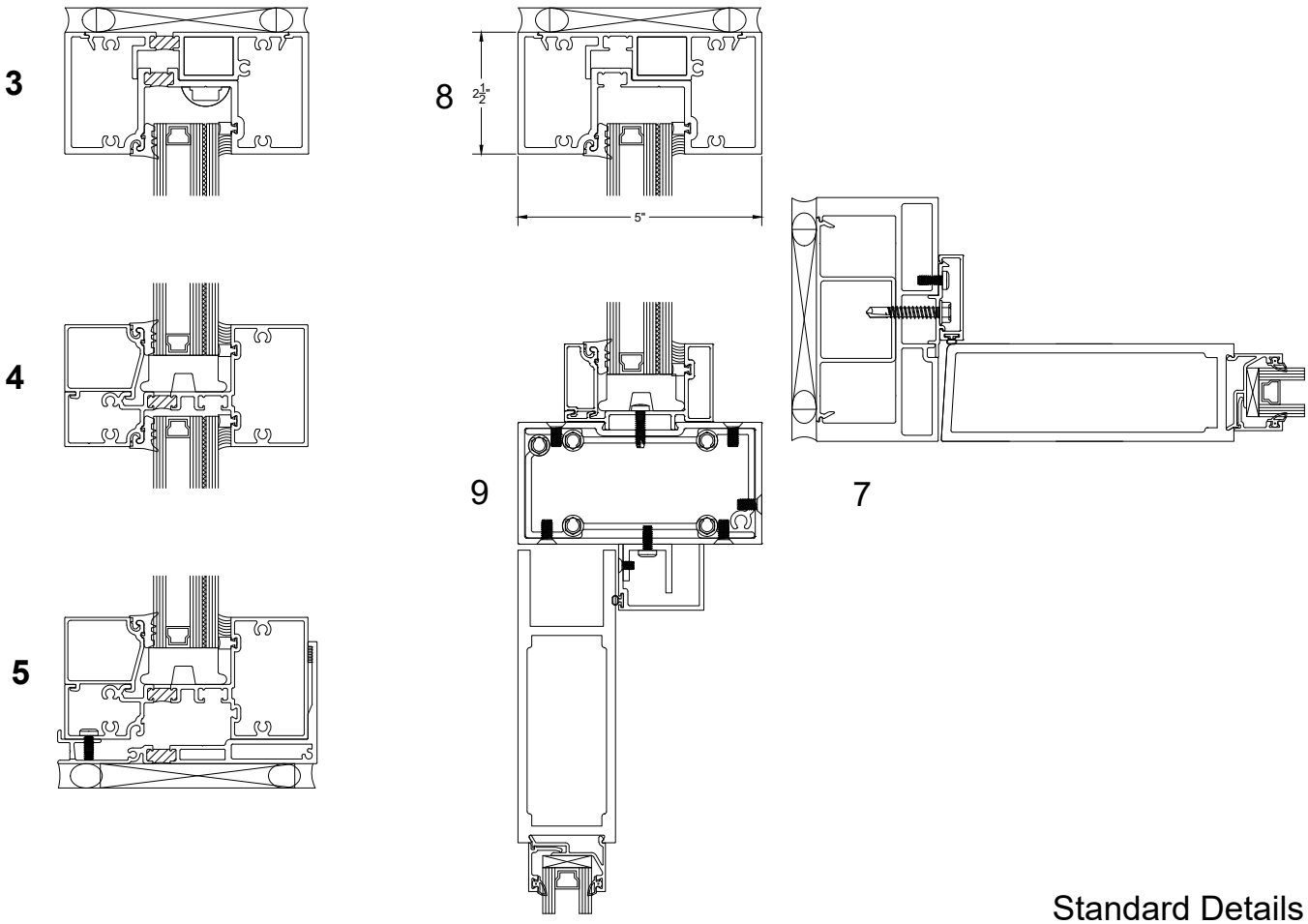

Standard Details

1/4 scale