TUBELITE®

DEPENDABLE

*LEADERS IN ECO-EFFICIENT STOREFRONT, CURTAINWALL AND ENTRANCE SYSTEMS*

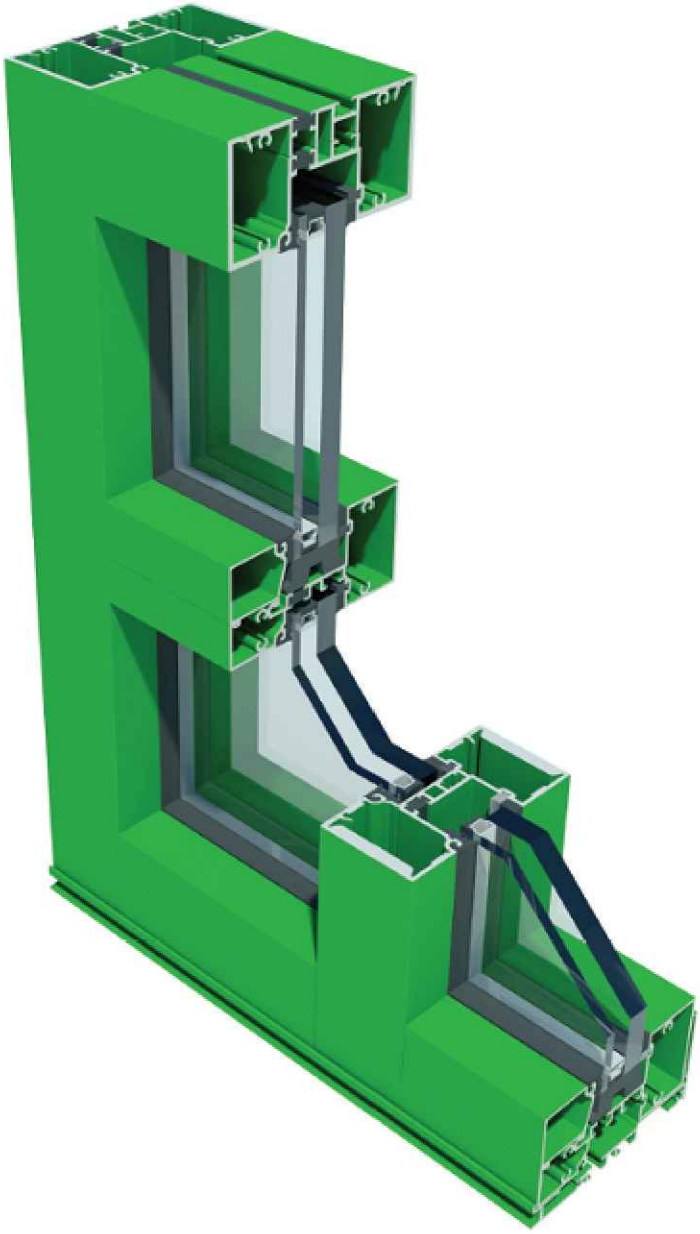

FORCEFRONT BLAST

# 34000 SERIES BLAST RESISTANT STOREFRONT

# INSTALLATION INSTRUCTIONS

3056 Walker Ridge Dr. NW, Suite G • Walker, MI 49544 • 800-866-2227

This page intentionally left blank

# TABLE OF CONTENTS

GENERAL CONSTRUCTION NOTES 5

PARTS LIST 6-12

QUICK REFERENCE CHECKLIST 13

ELEVATION DETAILS 14-16

FRAME FABRICATION
- Step 1 Determine Frame Size 17
- Step 2 Cut Material to Length 17
- Step 3 Sill Flashing 18
- Step 4 Closure Plates 18
- Step 5 Verticals & Pocket Closures for Horizontals 18
- Step 6 Head & Sill 19
- Step 7 Jamb 19
- Step 8 Steel Stiffener 20

FRAME ASSEMBLY
- Step 9 Sill Flashing End Dams 21
- Step 10 Assemble Frames 22
- Step 11 Gasket Installation 23
- Step 12 Sill Flashing Installation 23
- Step 13 Sill Flashing Splice 24

FRAME INSTALLATION
- Step 14 Install Frames 25-27

GLAZING
- Step 15 Glazing Preparation 28
- Step 16 Installing Glazing Units 28
- Step 17 Wet Glazing 29

DOOR & FRAME INSTALLATION
- Step 18 Preparation 30
- Step 19 Door Frame Assembly 30-31
- Step 20 Door Frame Installation 32
- Step 21 Door Installation 32
- Step 22 Transom Sash Installation 33
- Step 23-24 Door Glazing 34-35

This page intentionally left blank

# GENERAL CONSTRUCTION NOTES

1. These instructions cover typical product application, fabrication, installation and standard conditions and are general in nature. They provide useful guidelines, but the final shop drawings may include additional details specific to the project. Any conflict or discrepancies must be clarified prior to execution.

2. Materials stored at the job site must be kept in a safe place protected from possible damage by other trades. Stack with adequate separation so materials will not rub together and store off the ground. Cardboard or paper wrapped materials must be kept dry. Check arriving materials for quantity and keep a record of where various materials are stored.

3. All field welding must be done in accordance with AISC guidelines. All aluminum and glass should be shielded from field welding to avoid damage from weld splatter. Results will be unsightly and may be structurally unsound. Advise general contractor and other trades accordingly.

4. Coordinate protection of installed work with general contractor and/or other trades.

5. Coordinate sequence of other trades which affect framing installation with the general contractor (e.g. fire proofing, back up walls, partitions, ceilings, mechanical ducts, HVAC, etc.).

6. General contractor should furnish and guarantee bench marks, offset lines and opening dimensions. these items should be checked for accuracy before proceeding with erection. Make certain that all adjacent substrate construction is in accordance with the contract documents and/or approved shop drawings. If not, notify the general contractor in writing before proceeding with installation because this could constitute acceptance of adjacent substrate construction by others.

7. Isolate all aluminum to be placed directly in contact with masonry or other incompatible materials with a heavy coat of zinc chromate or bituminous paint.
Fasteners attaching framing to building structure are typically not provided by Tubelite.

8. Sealant selection is the responsibility of the erector, installer and/or glazing contractor and must be approved by the sealant manufacturer with regard to application and compatibility for its intended use. All sealants must be used in strict accordance with the manufacturer's instructions and applied only by trained personnel to surfaces that have been properly prepared.

9. Sealant must be compatible with all materials with which they have contact, including other sealant surfaces. Consult the sealant manufacturer for recommendations relative to shelf life, compatibility, cleaning of substrate, priming, tooling adhesion, etc. Recommend sealant manufacturer perform adhesion "pull test" at "wet" glazing for quality assurance.

10. Drainage gutters and weep holes must be kept clean at all times. Tubelite will not accept responsibility for improper drainage as a result of clogged gutters and weep holes.

11. This product requires clearances at the head, sill and jambs to allow for thermal expansion and contraction as well as construction tolerances. Refer to final distribution drawings for joint sizes. Joints smaller than 1/4" may be subject to failure. Consult the sealant manufacturer for proper sizing of joints.

12. All framing members, entrances and other materials are to be installed plumb, level and true with regard to established bench marks, column center lines or other working points established by the general contractor and checked by the erector, installer and/or glazing contractor.

13. After sealant is set and a representative amount of the wall has been glazed (500 square feet or more), run a water hose test to check installation. On large projects, a hose test should be repeated during glazing operation. This testing should be conducted in accordance with AAMA 501.2 specifications.

14. Cleaning of exposed aluminum surfaces should be done per AAMA recommendations.

15. Check www.tubeliteinc.com for any installation instruction updates.

TUBELITE®
DEPENDABLE
LEADERS IN ECO-EFFICIENT STOREFRONT, CURTAINWALL AND ENTRANCE SYSTEMS

# EXTRUSIONS

| SHAPE | DESCRIPTION | PART No. |
|---|---|---|
| 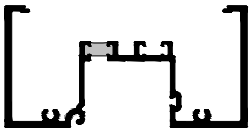 | Jamb, Vertical and Head | T34441FB |
| 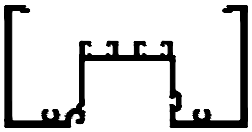 | | E34441FB |
| 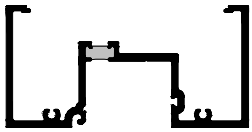 | Blast Head, Jamb, Vertical | T34150FB |
| 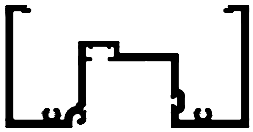 | | E34150FB |
| 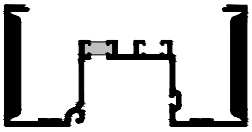 | Heavy Wall Vertical | T34361FB |
| 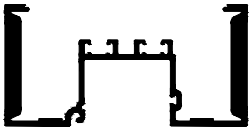 | | E34361FB |
| 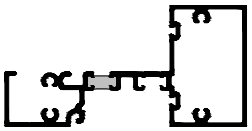 | Horizontal and Sill | T34143FB |
| 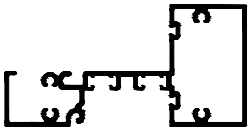 | | E34143FB |

# EXTRUSIONS

| SHAPE | DESCRIPTION | PART No. |
|---|---|---|
|  (Do not use at door jambs) | Shallow Pocket Closure<br>Use only E34345FB or E34322FB pocket closures at door jambs | T34345FB |
| | | E34345FB |
| 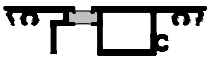 | Head / Jamb Filler | T34331FB |
|  | | E34331FB |
|  | Deep Pocket Closure<br>(Only required in door jamb when two door frames occur within elevation) | E34322FB |
|  | Glass Stop at Horizontal and Sill | E34104FB |
| 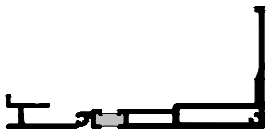 | Sill Flashing | T34148FB |
| 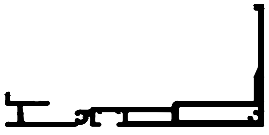 | | E34148FB |

TUBELITE®
DEPENDABLE
LEADERS IN ECO-EFFICIENT STOREFRONT, CURTAINWALL AND ENTRANCE SYSTEMS

# DOOR FRAME EXTRUSIONS

| SHAPE | DESCRIPTION | PART No. |
|---|---|---|
| 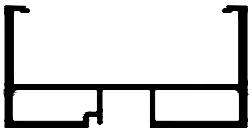 | Standard Door Jamb<br>(Use only non-thermal pocket closures at door jambs) | E34144 |
| 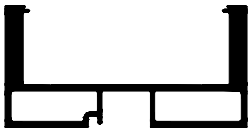 | Heavy Duty Door Jamb<br>(Use only non-thermal pocket closures at door jambs) | E34244 |
| 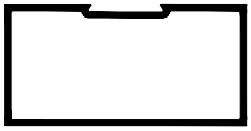 | Door Header<br>(Use P4441 Shear Clip) | E34125 |
| 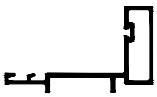 | Horizontal Transom Gutter | E34006 |
|  | Transom Glass Stop<br>(Use with E34006FB) | E6644 |
| 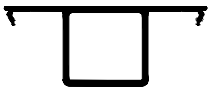 | Blast Door Jamb Filler | E34329FB |
|  | Segmented Perimeter Filler | P3433A<br>P3433B<br>P3433C |
|  | Segmented Thermal Perimeter FIller | P3433AT<br>P3433BT<br>P3433CT |

# DOOR FRAME EXTRUSIONS

| SHAPE | DESCRIPTION | PART No. |
|---|---|---|
|  | Vertical Gutter<br>(Use at Standard and Heavy Duty Door Jamb) | E3521 |
|  | Transom Stop<br>(Use with E3521) | E3522 |
|  | Inner Door Stop<br>(Use with E6505 Door Stop) | E6510 |
|  | Outer Door Stop<br>(Use with E6510 Inner Door Stop) | E6505 |
|  | Door Stop Channel<br>(Use with E2298 Door Stop) | E6504 |
|  | Door Stop | E2298 |
|  | Door Threshold<br>(Use with P3450 Bulb Gasket) | E3550 |
| 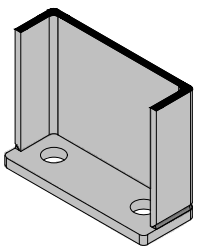 | Blast Door Jamb Anchor<br>(See page 30 & 31) | PTB15FB |

TUBELITE®
DEPENDABLE
LEADERS IN ECO-EFFICIENT STOREFRONT, CURTAINWALL AND ENTRANCE SYSTEMS

# ACCESSORIES

| SHAPE | DESCRIPTION | PART No. |
|---|---|---|
| 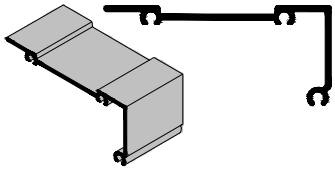 | Shear Clip<br>(Use with E34125 Door Header) | P4441 |
| 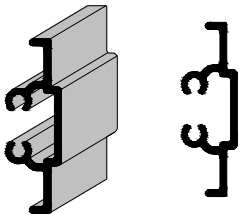 | Sill Clip at Entrance Jamb | P3498 |
| 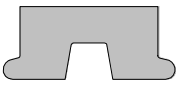 | Setting Block<br>at Horizontal, Sill and Transom | P6541 |
|  | Typical Exterior Gasket | P6503 |
|  | Interior Gasket for Dry Glaze System | P6586 |
|  | Interior SSG Spacer Gasket<br>for Wet Glaze System | P6587 |
|  | Door Stop Bulb Gasket | P6296 |
|  | Steel Reinforcement Channel<br>1¼" X 4¼" X 10 ga | P3437 |

# ACCESSORIES

| SHAPE | DESCRIPTION | PART No. |
|---|---|---|
| 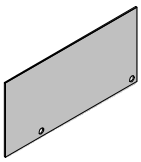 | End Dam<br>(Use at E34259 and T34259 Sill Flashing) | P1156 |
| 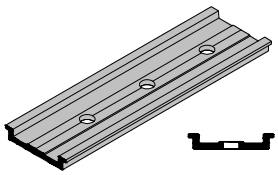 | Sill Block<br>(Use at Sill Flashing Termination at Doors) | P3426 |
| 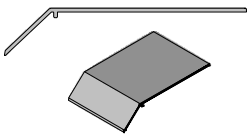 | Water Diverter<br>(Use at Intermediate Horizontals) | P6581 |
| 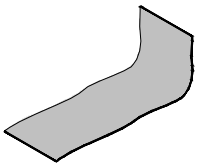 | Silicone Splice Sleeve<br>(Use at E34259 and T34259 Sill Flashing)<br>Sold as a roll | P3444 |
|  | #10-24 X ½" PH<br>(Use at E6507 Inner Door Stop, E0190 Door Stop Angle, Sill to Subsill and E3521 to Vertical) | S206 |
| 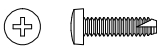 | #10-24 X ¾" SS PH<br>(Use at E34006 Glass Stop Horizontal) | S270 |
| 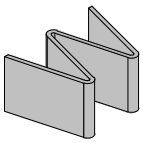 | EPDM AntiWalk "W" Block<br>(Use at Deep Pockets on Verticals and Jambs)<br>for Dry Glazing Only | P1916 |

TUBELITE®
DEPENDABLE
LEADERS IN ECO-EFFICIENT STOREFRONT, CURTAINWALL AND ENTRANCE SYSTEMS

# ACCESSORIES

| SHAPE | DESCRIPTION | PART No. |
|---|---|---|
|  | #8-32 X 5/16" SS UC FH<br>(Use at E6504 Door Stop Channel) | S131 |
|  | #12-24 X ⅝" Type 23 UC FH<br>(Use to attach the E34125 door header to the P4441 Shear Clip) | S286 |
|  | #12-24 X ½" SS UC FH<br>(Use at threshold attachment to door jamb clip) | S070 |
|  | #12-24 X 2" HWH<br>(Use at P4441 Shear Clip) | S205 |
|  | #10-24 X ½" FH<br>(Use at Pocket Closure to Vertical) | S161 |
| 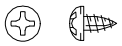 | #10-24 X ¼" PH<br>(Use at P3498 Sill Clip to Sill) | S334 |
| 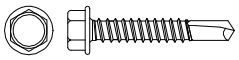 | #12-14 X 1½" HWH Self-Drilling, #3 pt<br>Frame Assembly Screw &<br>Door Stop Screw | S419 |
|  | #8 X ⅜" PH<br>(Use at Sill Flashing End Dam) | S196 |
| 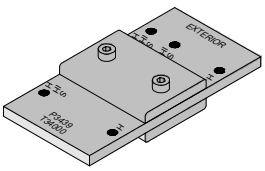 | Drill Fixture | P3439 |

# QUICK REFERENCE CHECKLIST

1. Make sure the opening is square and the caulk joints are 1/2” minimum around the frame.
2. Ensure surfaces that will be sealed are free of contaminants that can lead to adhesion issues.
3. Sill flashing must be properly shimmed and level from left to right and front to back for proper drainage.
4. A continuous line of sealant must be applied between the sill and the top interior leg of the sill flashing
5. Check that all weeps conform to the locations and sizes called out in these instructions.
6. Ensure that sill flashing weep holes are not plugged by the perimeter seal.
7. A sill flashing splice is needed in openings larger than 24 feet. Follow instructions for installing and sealing.
8. End dams must be installed and sealed onto the sill flashing. Fasteners used must also be sealed.
9. Where the sill flashing abutts a door jamb, the jamb pocket cavity must be completely sealed to dam this area.
10. Cap seal any exposed anchor or screw.
11. Seal ends of horizontal frame members to vertical members.
12. Water diverter installation and sealing is critical. Check installation against instructions to ensure conformity.
13. Apply sealant between all corner gasket joints.
14. Glass bites must be equal on all sides.
15. Double check anchor size and location against installation instructions or approved shop drawings.
16. Provide glazing tape (Tremco SGT921 One-Sided) for door glazing (Not Included).

# GLASS SIZE CALCULATION

Width tolerance = + 0", - 1⁄16"

Typical Framing:
Glass Width = D.L.O. plus 1¼"
Glass Height = D.L.O. plus 1¼”

Transoms with Sash:
Glass Width = D.L.O. plus 1¼”
Glass Height = D.L.O. plus 1¼” (Ref. Fig.13.1)

Entrance Door:
Horizontal Glass Width = Door Opening Width minus 13 7/32”
Vertical Glass Height = Door Opening Height minus 17 19/32”

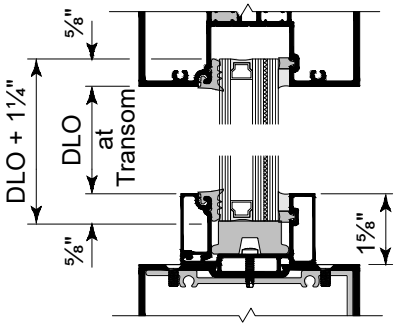


VERTICAL D.L.O. at SASH
Fig. 13.1

TUBELITE®
DEPENDABLE
LEADERS IN ECO-EFFICIENT STOREFRONT, CURTAINWALL AND ENTRANCE SYSTEMS

# ELEVATION DETAILS
Wet glazed shown; dry glazed similar

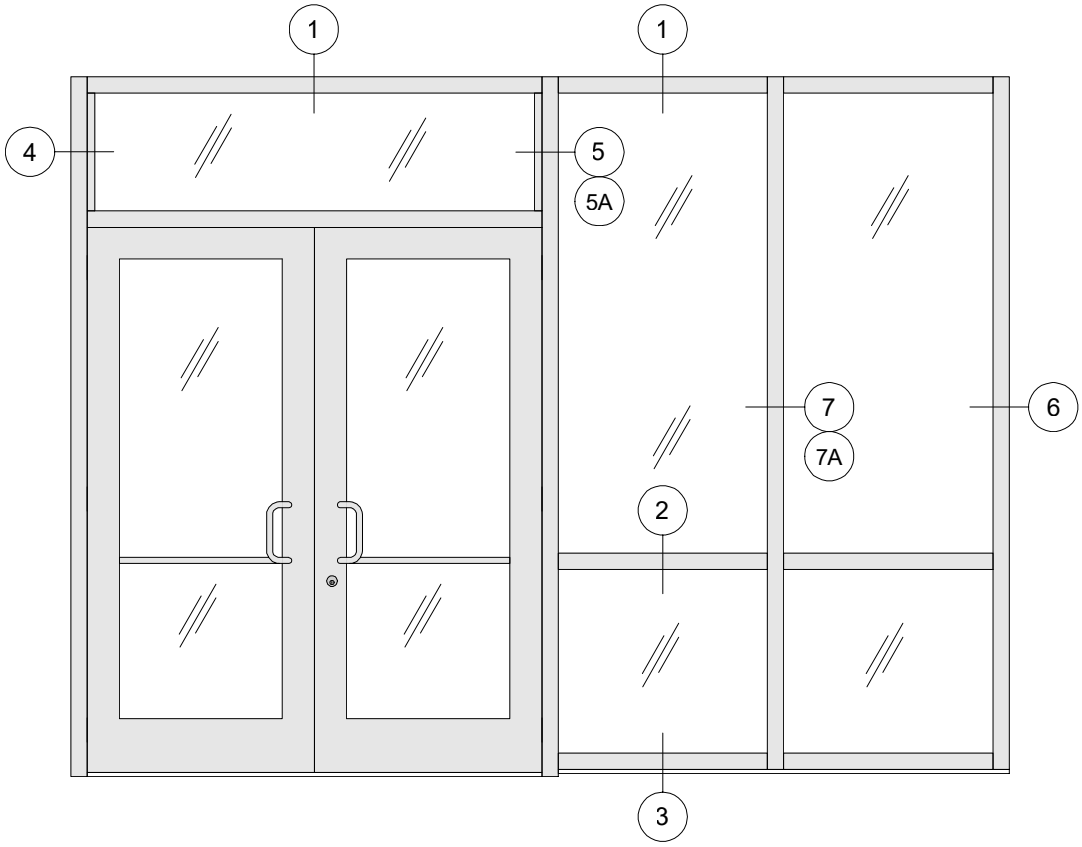


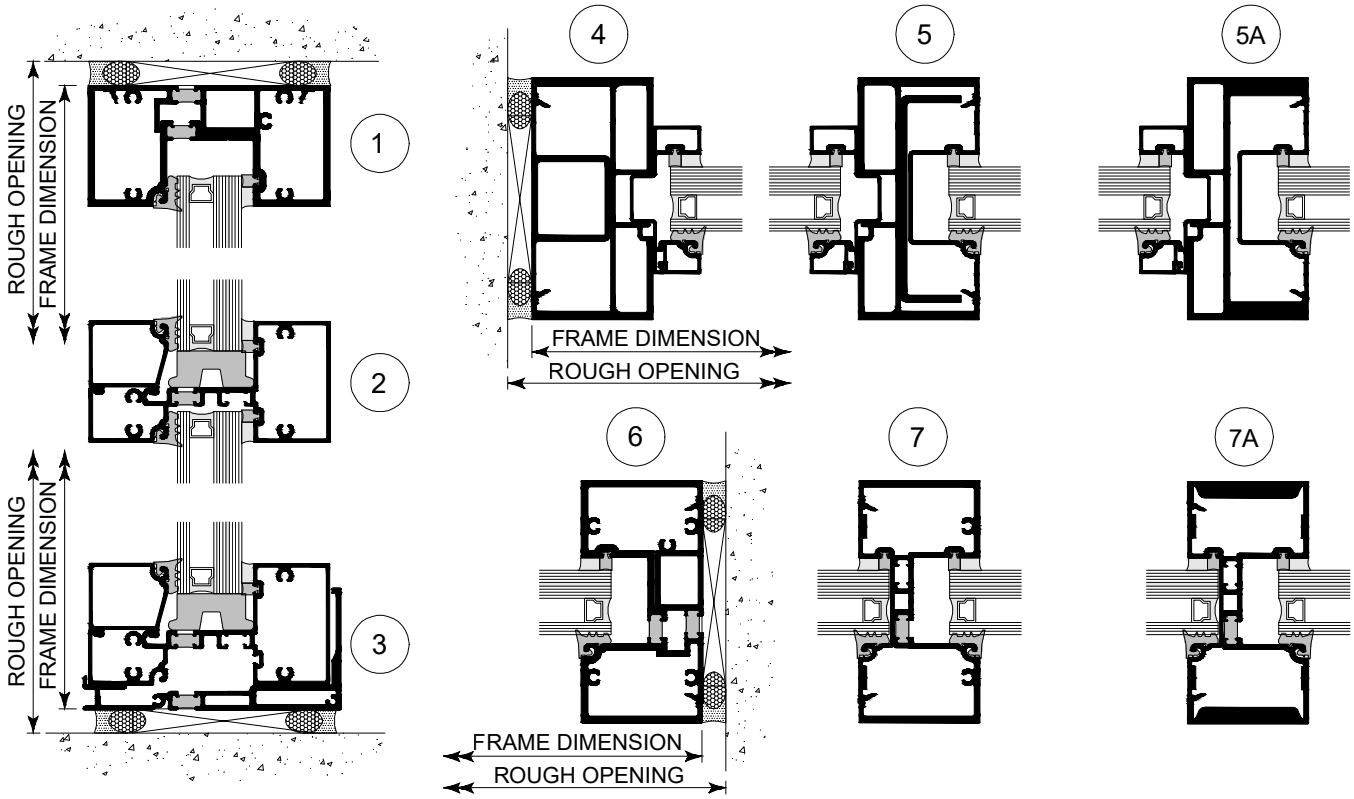

# ELEVATION DETAILS




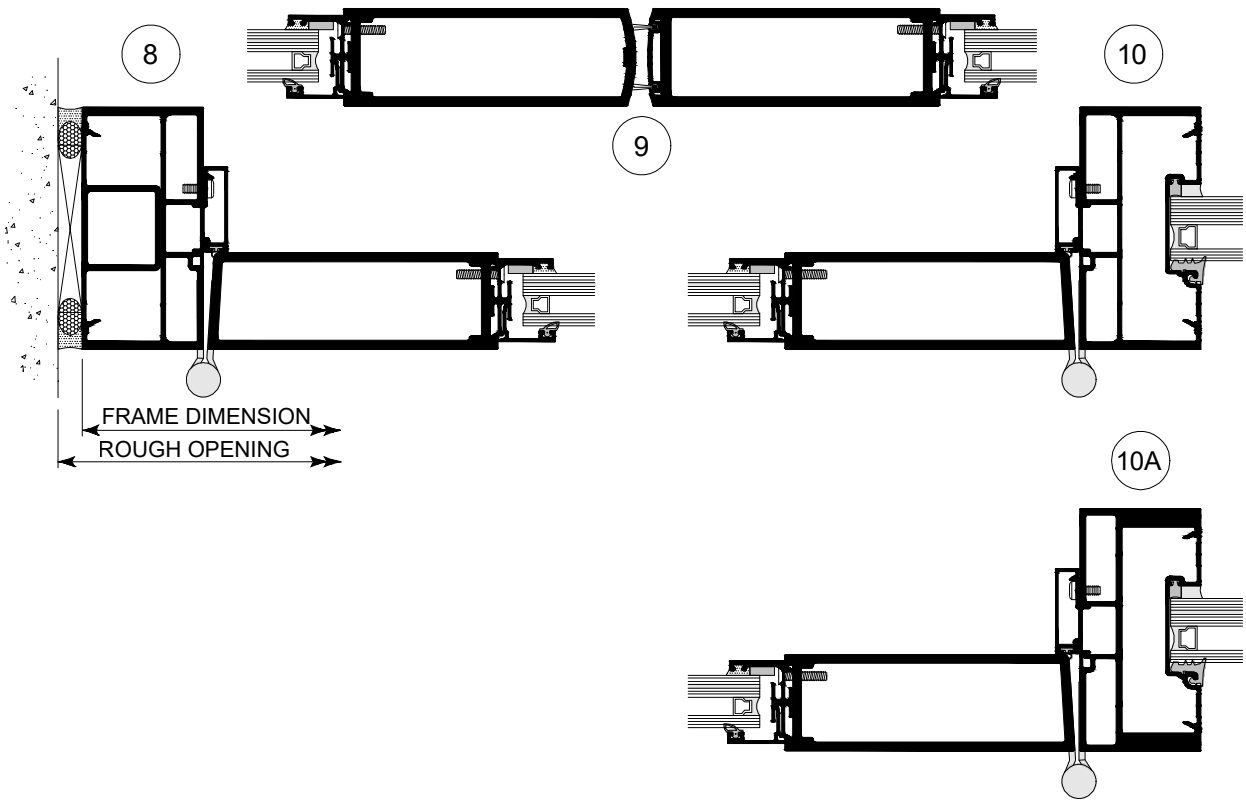

TUBELITE®
DEPENDABLE
LEADERS IN ECO-EFFICIENT STOREFRONT, CURTAINWALL AND ENTRANCE SYSTEMS

# ELEVATION DETAILS

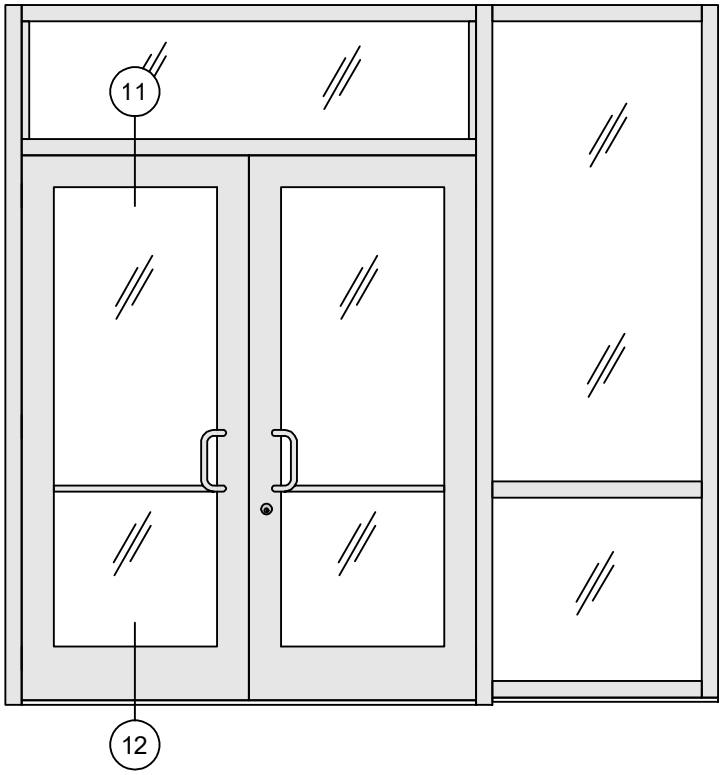


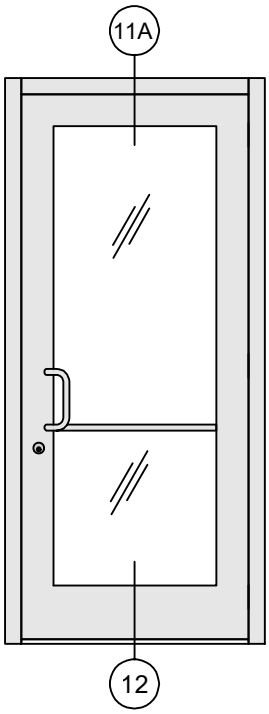


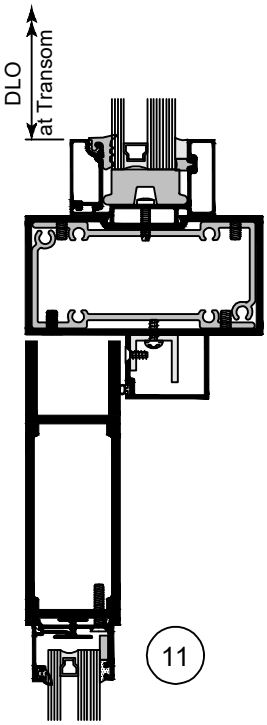


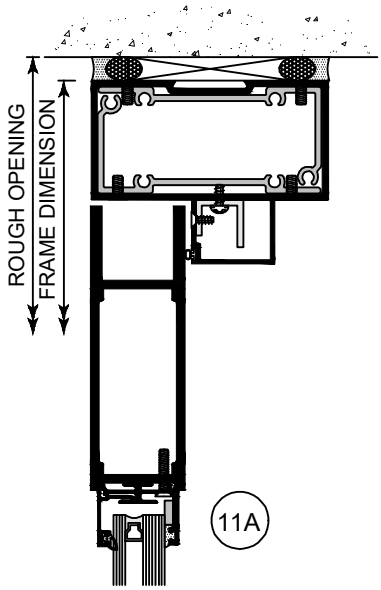


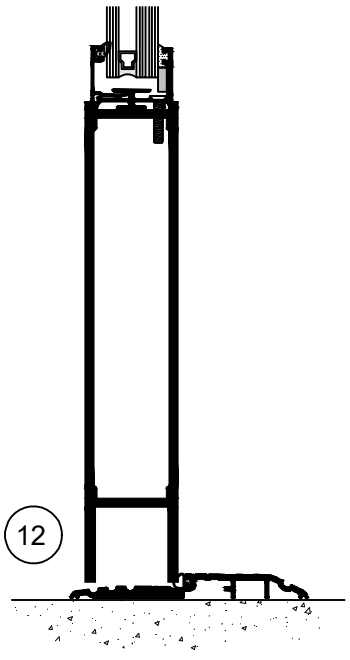

# FRAME FABRICATION

NOTE: Non-thermal extrusions are shown in these instructions for clarity. Fabrication and installation of thermal members are the same.

Step 1: Determine Frame Size

Frame Width

A. Make sure the opening is square and plumb. Measure each diagonal of the opening. SEE Fig. 17.1.

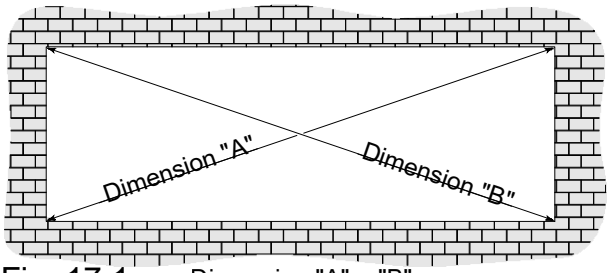


Fig. 17.1 Dimension "A" = "B"

B. Measure the width of the opening at the top, middle and bottom. Select the smallest of these dimensions and subtract the left and right caulk joint width per approved shop drawings (1/2" min at each jamb). SEE Fig. 17.2.

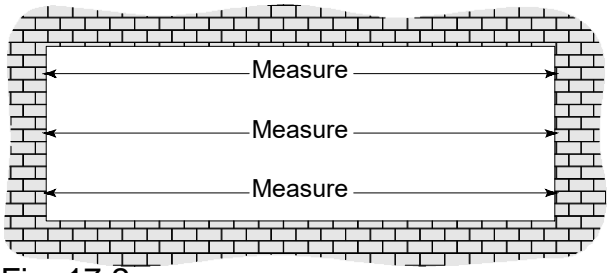


Fig. 17.2

Frame Height

C. Measure the height of the opening at several points along the entire width of the opening. Select the smallest of these dimensions and subtract the top and bottom caulk joint height per approved shop drawings (1/2" min at head and 1/2" min at sill). SEE Fig. 17.3.

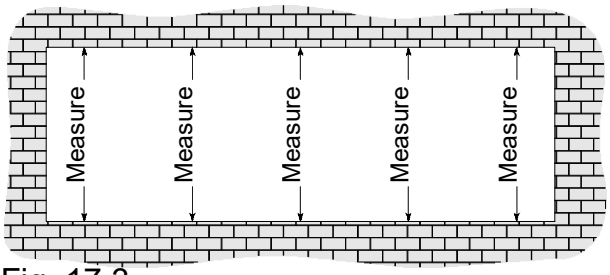


Fig. 17.3

Step 2: Cut Material to Size

Note: Door framing material comes cut to size from the factory. In cases of door frames with transoms, the door jambs must be cut down in the field to size and head member attached per standard instructions shown within this manual.

Framing Members

Sill Flashing with Entrance.....Door Jamb to End of Frame + ⅛" (SEE Fig. 17.4)
Sill Flashing without Entrance.....Frame Width + ¼"
Verticals.....Frame Height - ½"
Head, Horizontal & Sill.....D.L.O.
Horizontal & Sill Glass Stops.....D.L.O. - 1⁄32"
Pocket Closures at Verticals..... Frame Height - ½"
Vertical Snap-in Fillers..... Frame Height - ½"
Horizontal Snap-in Fillers.....Frame Width - ½"

Accessories

Exterior Gasket..... D.L.O. + Allowance*
Interior Dry Glaze Gasket..... D.L.O. + Allowance*
Interior SSG Spacer.....D.L.O. + 1¼" at Verticals + Allowance*
D.L.O. at Horizontals + Allowance*

*Allowance = 1/8" extra length per foot of D.L.O.

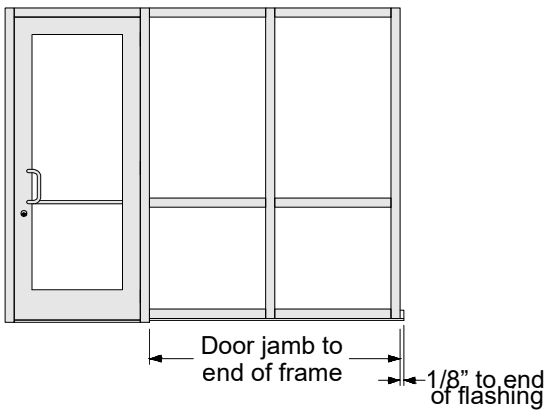


Fig. 17.4

Sill Flashing Note:
For openings wider than 24', the sill flashing must be spliced at the centerline of a D.L.O. Splice joint should be 3/8" wide. SEE Fig. 24.1 - Fig. 24.3 for sill flashing splice details.

TUBELITE®
DEPENDABLE
LEADERS IN ECO-EFFICIENT STOREFRONT, CURTAINWALL AND ENTRANCE SYSTEMS

# FRAME FABRICATION

Step 3: Fabricate Sill Flashing

A. Drill two 5/16” dia. weep holes at each side of the verticals. SEE Fig. 18.1.

B. Drill clearance holes for perimeter anchors. Size and quantity vary per job. Refer to approved shop drawings.

Step 4: Fabricate Pocket Closures

A. Drill #7 (.201 dia) clear hole with countersink for a #10 FH screw 6" from ends and 1/4 points of closure pocket length. SEE Fig. 18.2.
Verticals will be match drilled during installation of frame. See Step 14.H, page 27.

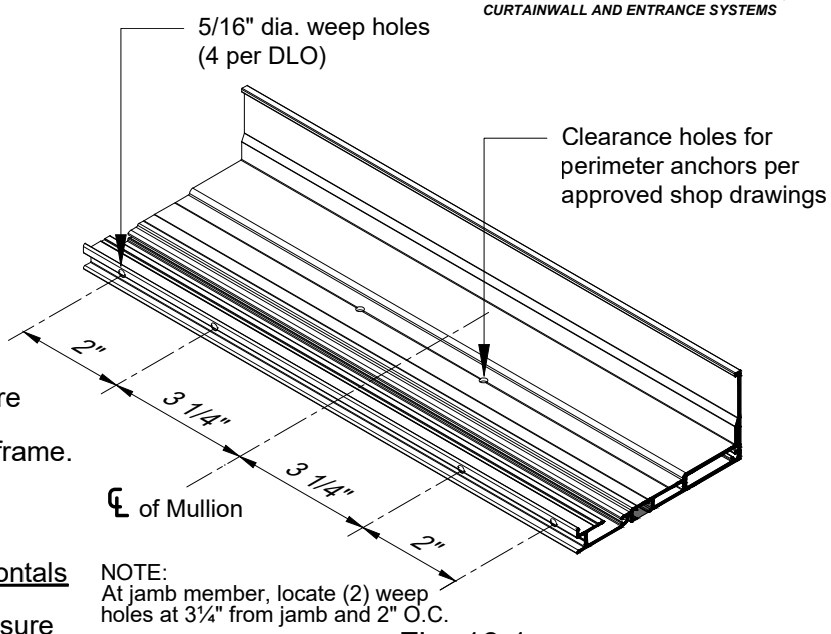


Fig. 18.1

Step 5: Fabricate Verticals & Pocket Closures for Horizontals

A. Drill frame assembly holes in verticals, jambs & closure pockets with drill fixture P3439:
Head = holes marked “H”
Intermediate Horizontal = holes marked “IH”
Sill = holes marked “S”
SEE Fig. 18.3. Door jambs are pre-fabricated by Tubelite.

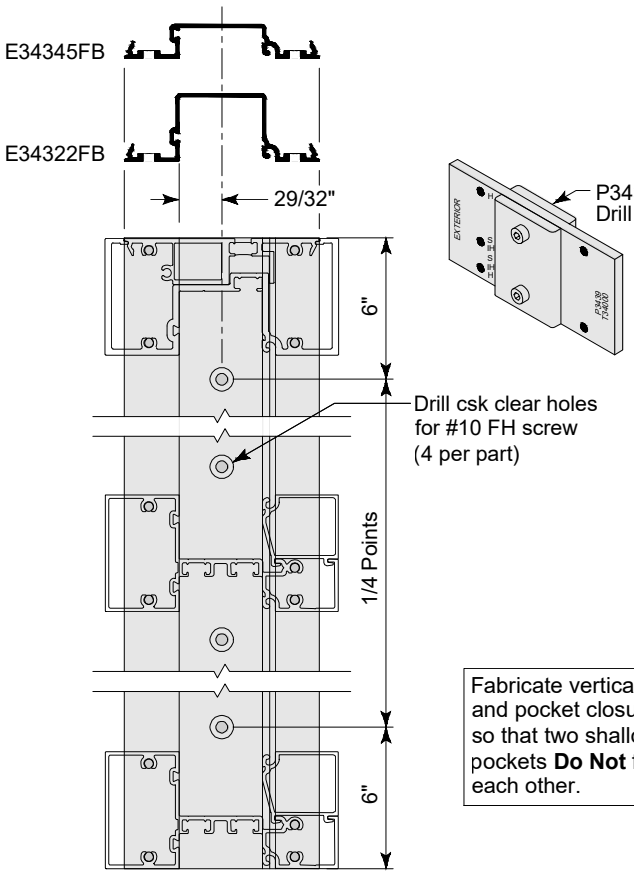


Fig. 18.2




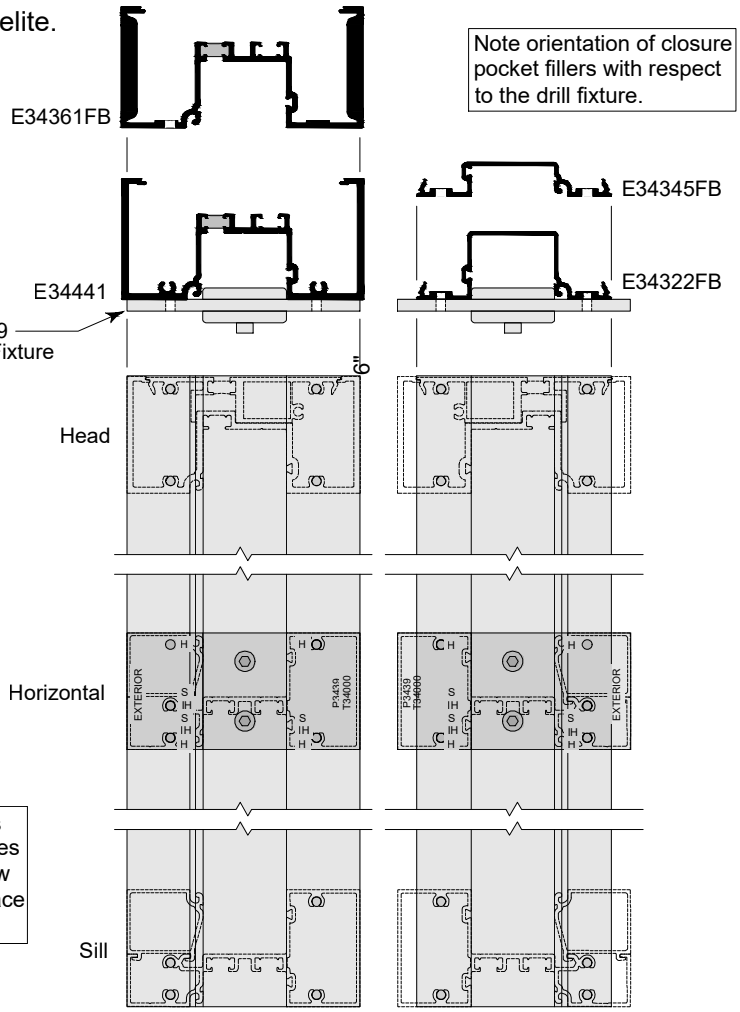


Fabricate verticals and pocket closures so that two shallow pockets **Do Not** face each other.

Fig. 18.3

# FRAME FABRICATION

## Step 6: Fabricate Head & Sill

Please note: The snap in anchor filler comes in stock lengths or pre-cut sections. Please reference approved shop drawings to determine spacing and product to use.

A. For typical snap-in fillers (not strap anchors), drill ends of head member at v-groove line for hex head anchors as specified on approved shop drawings.

B. When using typical snap-in fillers (not strap anchors), attach fillers to ends of head member and match drill clearance hole through snap-in fillers.

C. Drill clearance hole for #10 screw in sill member at v-groove. Locate 5- 3/8" from ends and 12" O.C. SEE Fig. 19.2.

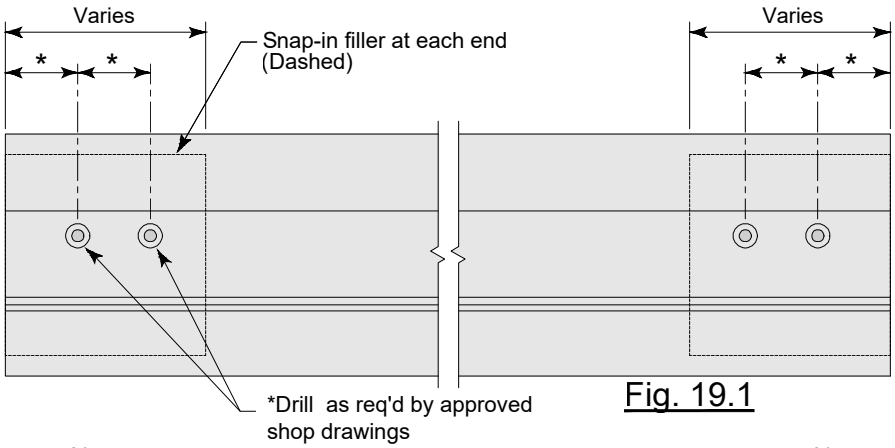


Fig. 19.1

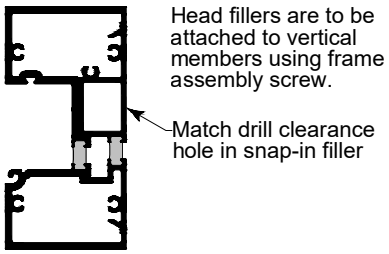


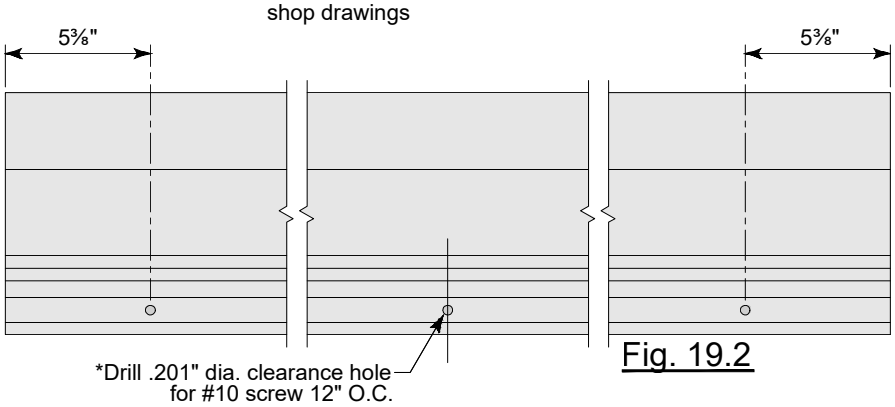


Fig. 19.2

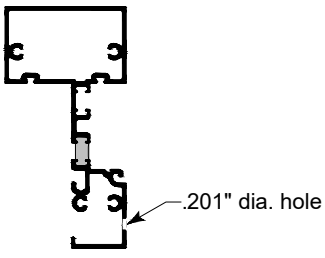


## Step 7: Fabricate Jambs for Anchors

A. Drill and countersink jamb member at v-groove line for flat head anchors as specified on approved shop drawings.

B. Attach fillers to jamb member and match drill clearance hole through snap-in fillers. SEE Fig. 19.3.

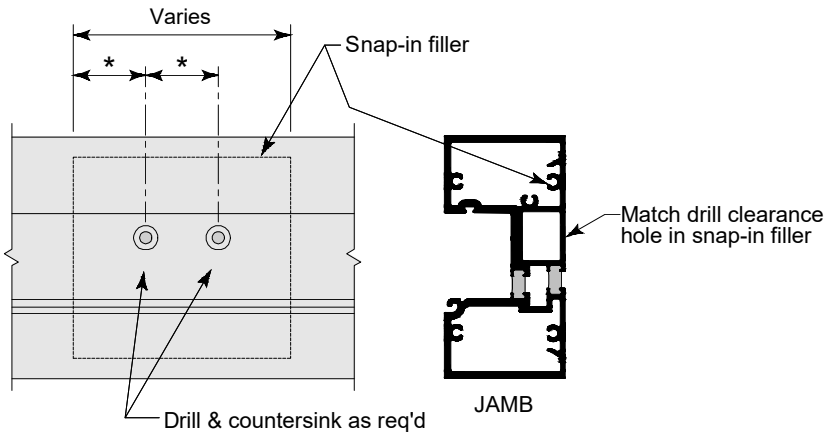


Fig. 19.3

TUBELITE®
DEPENDABLE
LEADERS IN ECO-EFFICIENT STOREFRONT, CURTAINWALL AND ENTRANCE SYSTEMS

# FRAME FABRICATION

Step 8: Steel Stiffener (As required)

A. If P3437 steel stiffeners are required in the door jamb mullions, pre-drill .201 dia (drill 7) clearance holes for S-206 #10 screw at 12" O.C. (3" from ends). SEE Fig. 20.1.

B. Install P3437 steel stiffener into door jamb mullion. Match drill .154 dia (drill 23) pilot holes. Attach steel to door jamb mullion with S206 #10-24 x 1/2" PH type F screw. SEE Fig. 20.2.

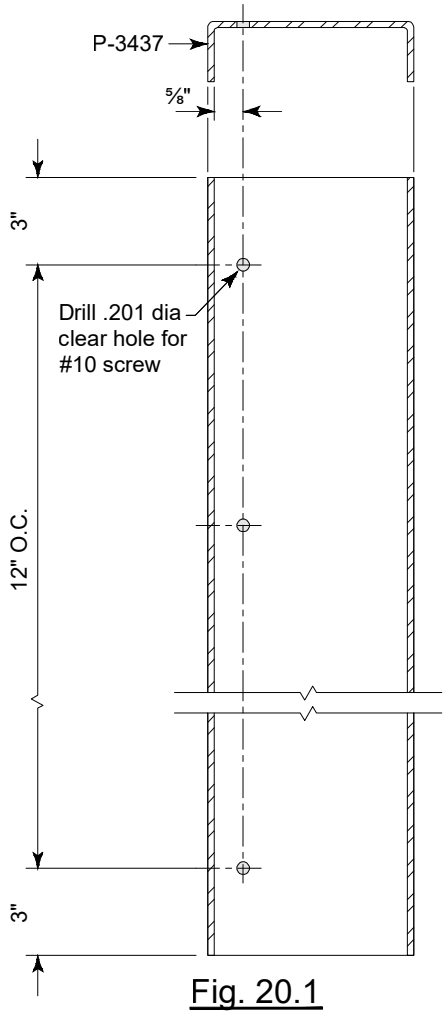


Fig. 20.1

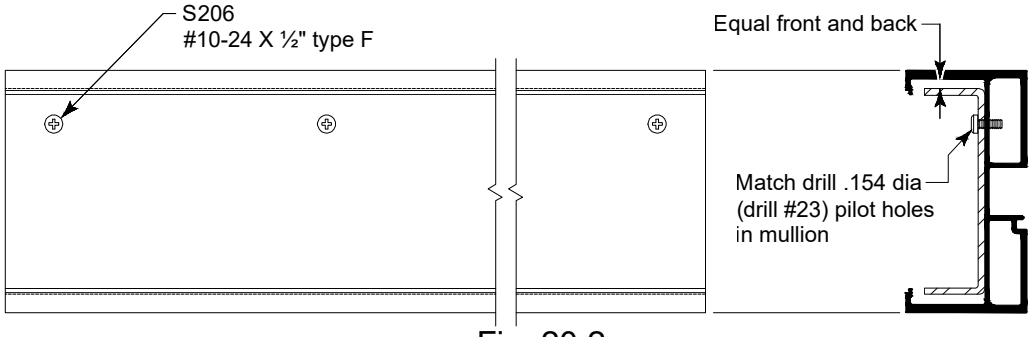


Fig. 20.2

Step 9: Install Sill Flashing End Dams

A. Install P1156 end dam at each end of sill flashing with (2) S196 #8 x 3/8" PH screws. Set aside and allow sealant to cure. Tool excess sealant. SEE Fig. 21.1.

NOTE: If sill flashing is spliced, install on jamb-end only. Refer to Step 13, page 24 for splicing instructions.

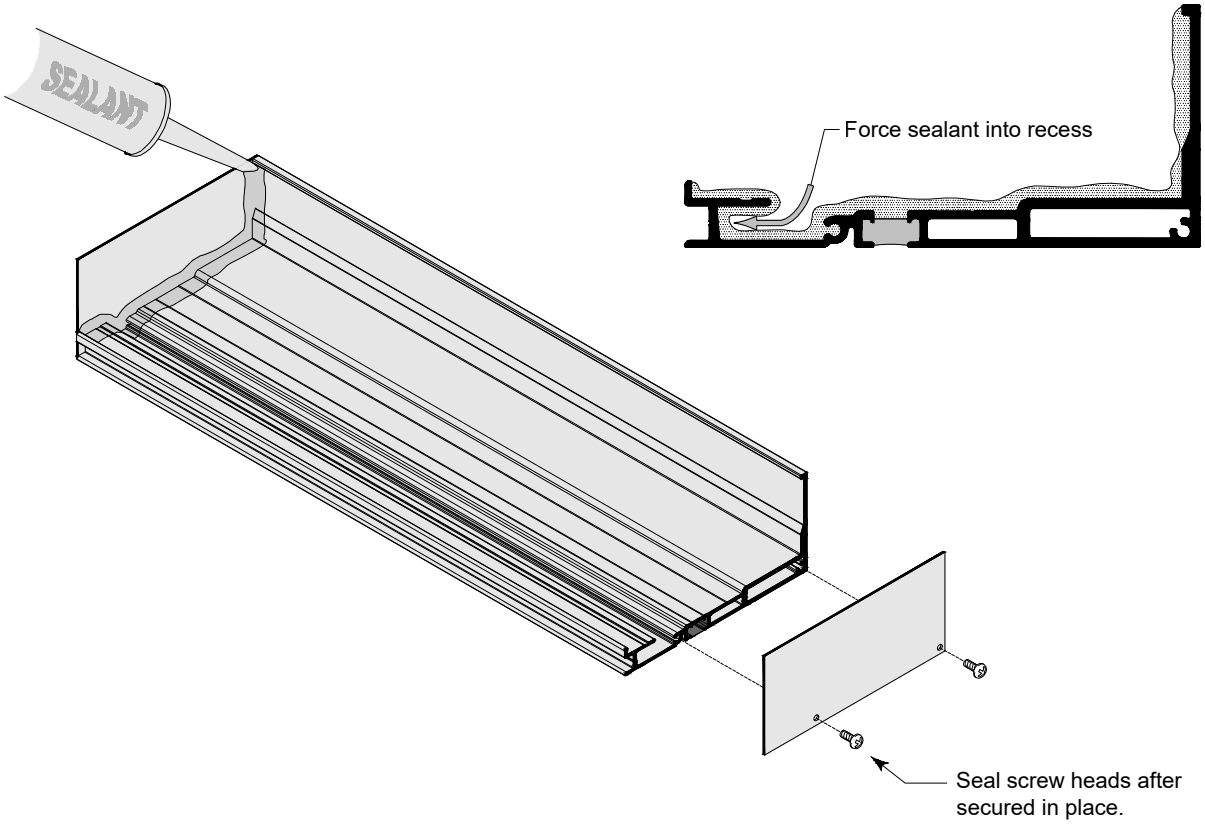


Fig. 21.1

# FRAME ASSEMBLY

Step 10: Assemble Frames

A. Clean all mating surfaces on horizontal & vertical.

B. Apply sealant to ends of the head, head anchor, horizontal and sill members prior to attaching to vertical members. SEE Fig. 22.1.

C. Attach head, head anchor, horizontal and sill members to the vertical and pocket closure members with S419 #12-14 x 1 1/2" HWH frame assembly screws. SEE Fig. 22.1.

D. Tool sealant at each joint.

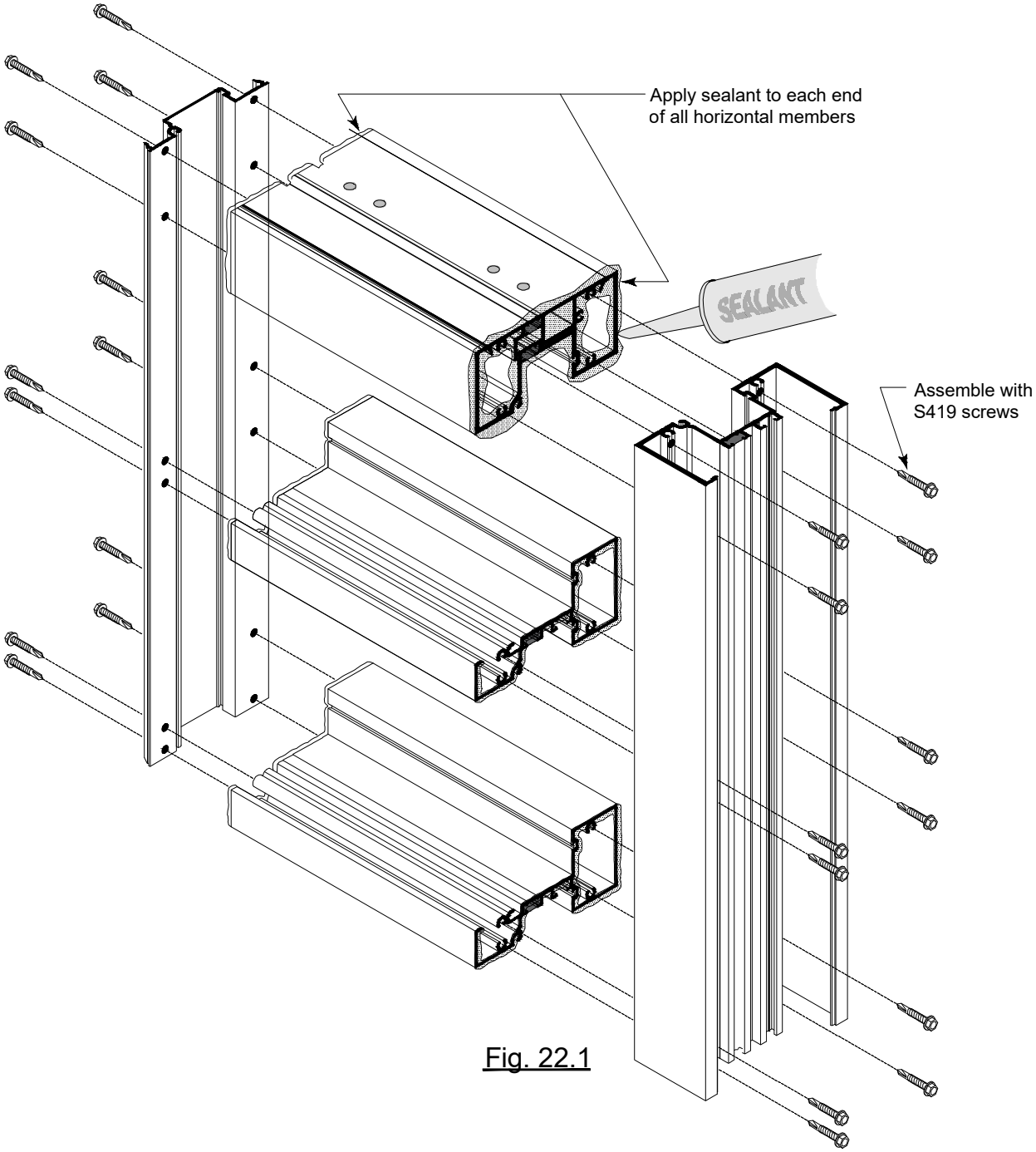


Fig. 22.1

# FRAME ASSEMBLY

## Step 11: Install Gaskets

Wet Glazing:

A. Install P6587 silicone spacer gasket at interior side of framing members. SEE Fig. 23.1.

Dry Glazing:

A. Install P6586 silicone spacer gasket at interior side of framing members. SEE Fig. 23.2.

DO NOT STRETCH GASKETS WHEN INSTALLING.
Start at the center of the D.L.O. and work towards ends.

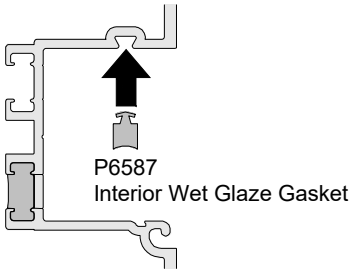


Fig. 23.1

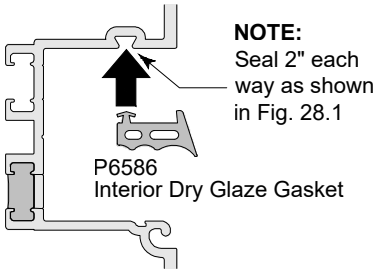


Fig. 23.1

## Step 12: Install Sill Flashing

A. Center the sill flashing in the opening. If sill flashing is spliced, be sure the joint at the jamb is per approved shop drawings (jamb caulk joint minus 1/8"). If there is an entrance door in the opening, refer to Step 21, page 32 for instructions. Splice joint to be 3/8" min.

B. At the highest point of the sill (smallest rough opening height), shim the sill flashing with a minimum 1/4" shim space. Sill flashing must be installed level side to side and front to back. SEE Fig. 23.2.

C. Shim tight between the sill flashing end dam and building condition to ensure end dam is not dislodged during frame installation.

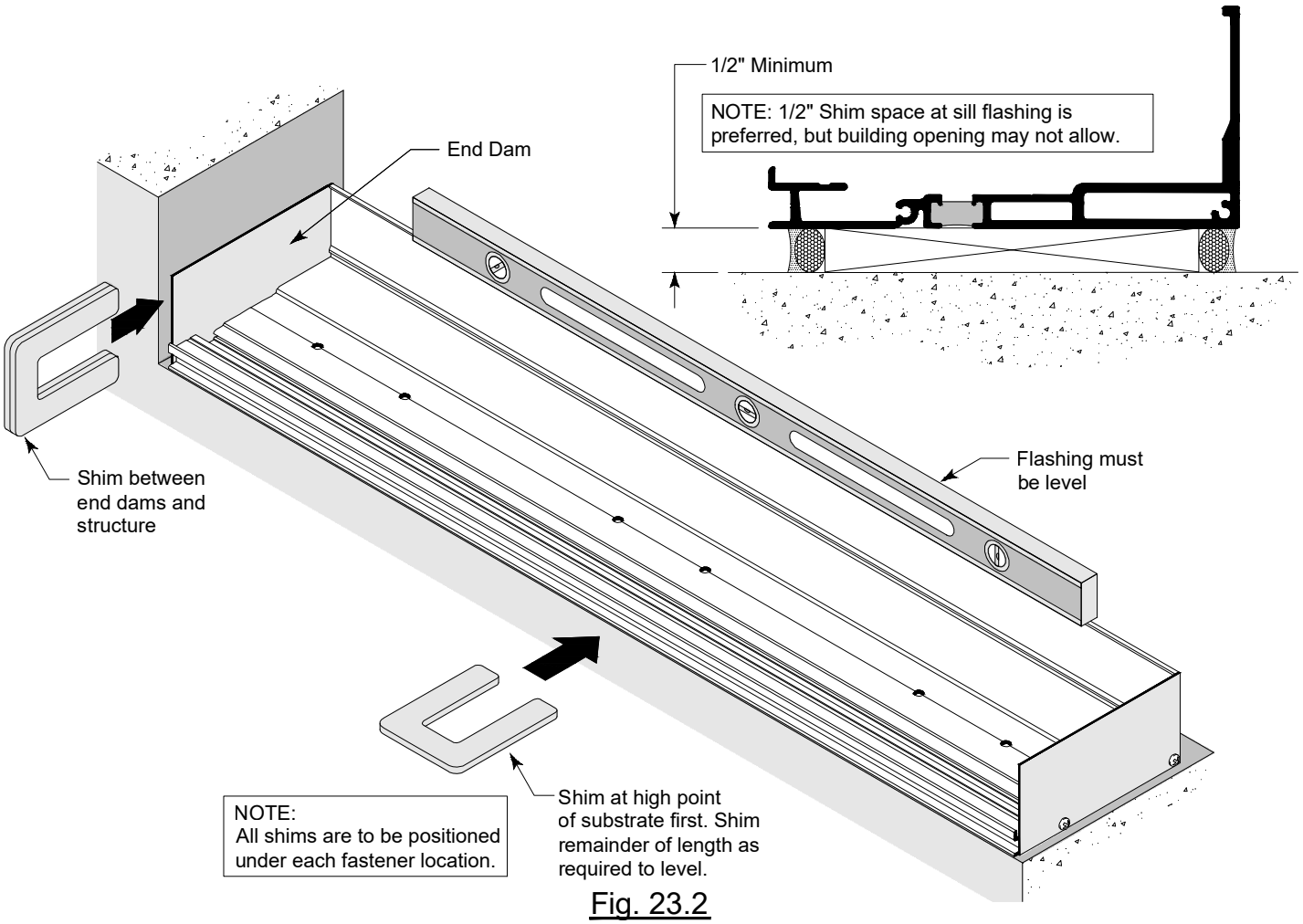


Fig. 23.2

# FRAME ASSEMBLY

Step 13: Install Sill Flashing Splice (If required)

A. Continue installing sill flashing per Step 12 across the opening.

B. Lay silicone sheet into sill flashing at splice location and cut to length. SEE Fig. 24.1.

C. Install backer rod under the sill flashing at the splice joint.

D. Clean surfaces where splice will be applied. Apply sealant as shown in SEE Fig. 24.2.

E. Set splice sleeve in place and tool sealant. Seal front and back joints. SEE Fig. 24.3.

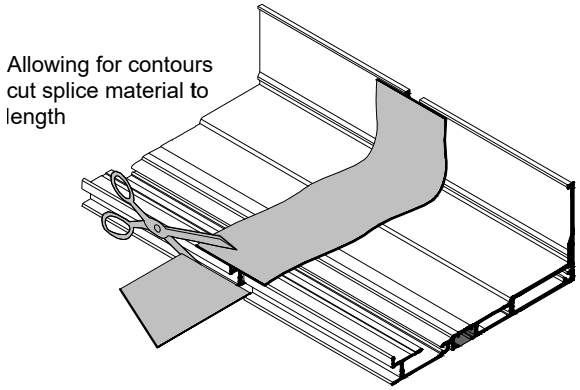


Fig. 24.1

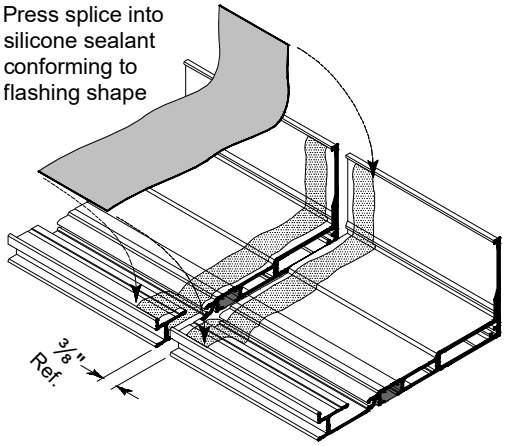


Fig. 24.2

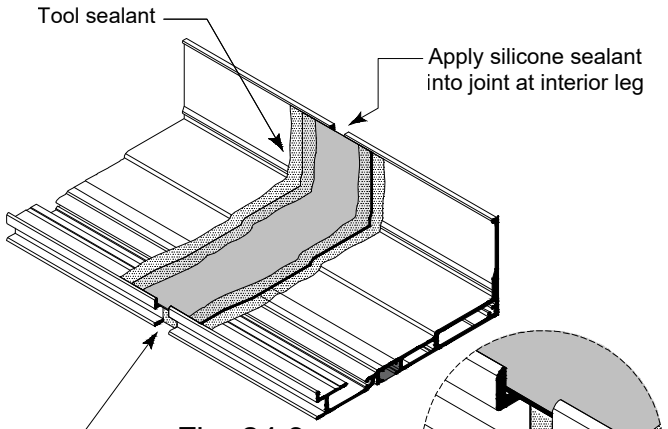


Fig. 24.3

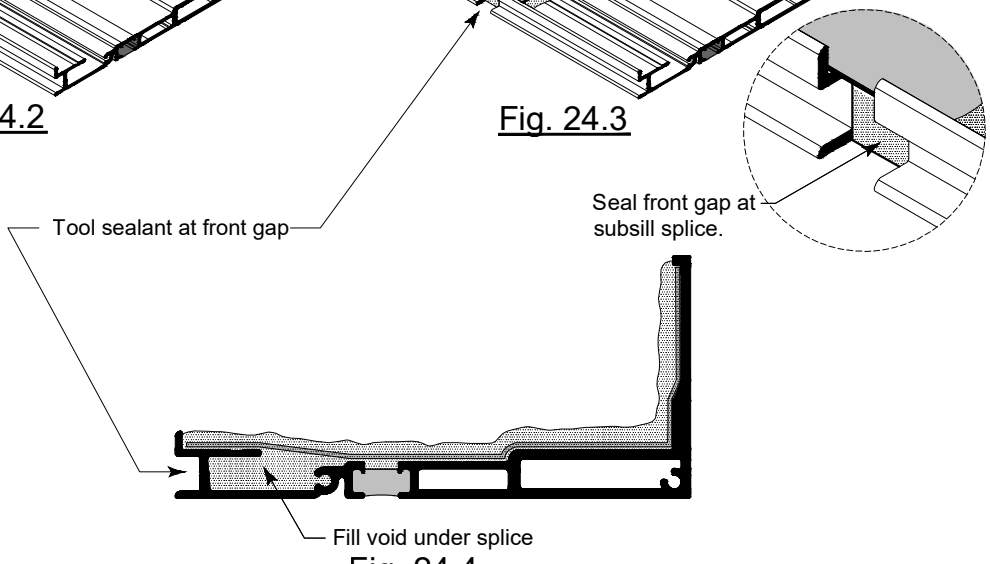


Fig. 24.4

# FRAME INSTALLATION

Step 14: Install Frames

NOTE: If there is an entrance door within the frame, the sill block must be installed per Fig. 32.1 & Fig. 32.2.

A. Starting on one side of the opening, apply a bead of silicone to the back leg of the sill flashing and the end dam prior to installing each frame. SEE Fig. 25.1. Apply a sealant bead on the back leg of the sill flashing only for the frame to be installed.

B. Lift first frame onto the sill flashing then apply sealant to gap at end dam. SEE Fig.25.2.

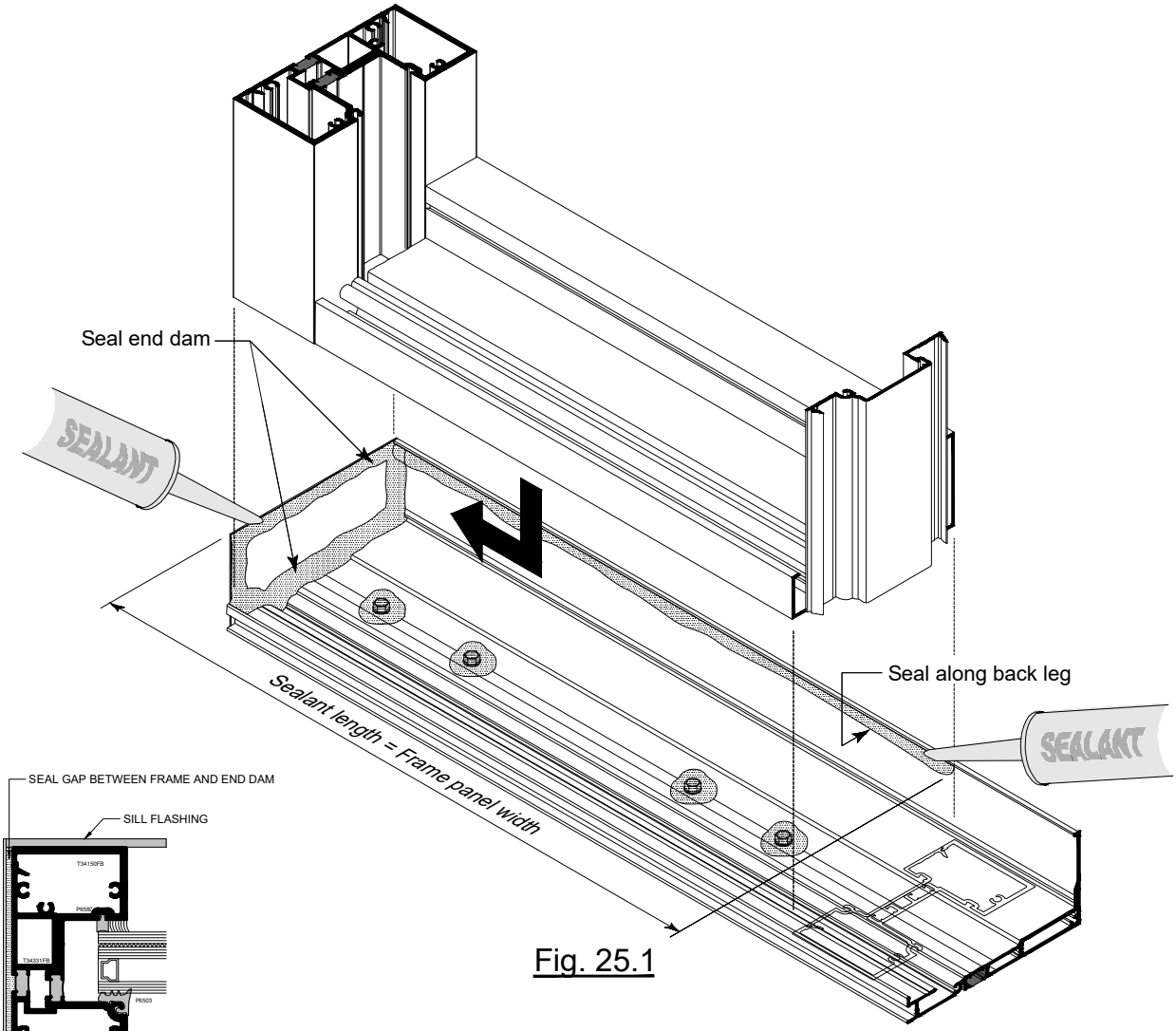


Fig. 25.1

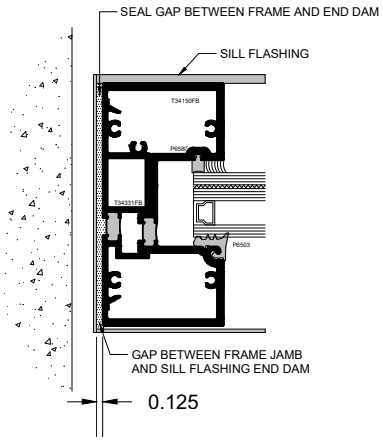


Fig. 25.2

TUBELITE®
DEPENDABLE
LEADERS IN ECO-EFFICIENT STOREFRONT, CURTAINWALL AND ENTRANCE SYSTEMS

# FRAME INSTALLATION

Step 14: Install Frames (Continued)

C. Prior to installing the next frame, run a 6” bead of sealant at the bottom of the vertical mullion snap detail. SEE Fig. 26.1.

D. Lift each frame onto the sill flashing and engage with the previous frame, sealing per step 14 C.

E. Check to ensure frame is plumb, level and jamb caulk joint is per approved shop drawings.

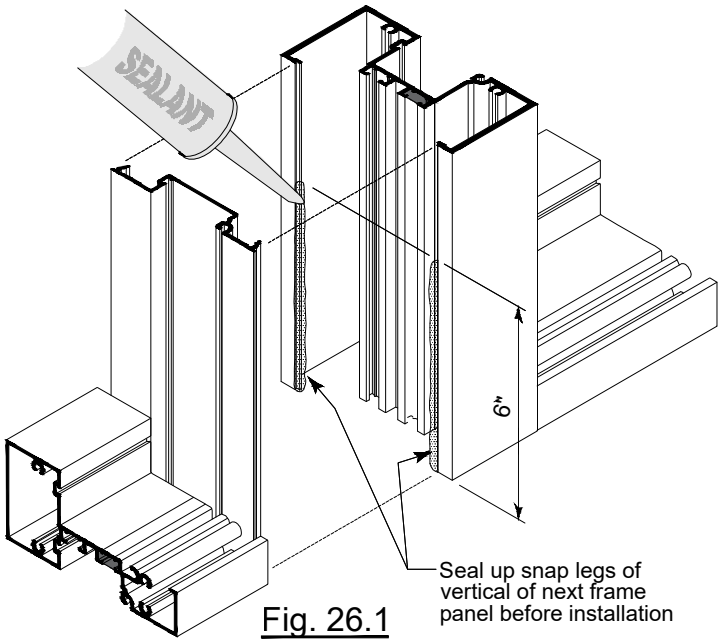


Fig. 26.1

F. Match drill into sill flashing at holes in sill member with drill #24 (.152 dia) pilot hole for #10 screw. Anchor sill to sill flashing with S-206 #10-24 x 1/2” PH screw. Cap seal heads. SEE Fig. 26.2.

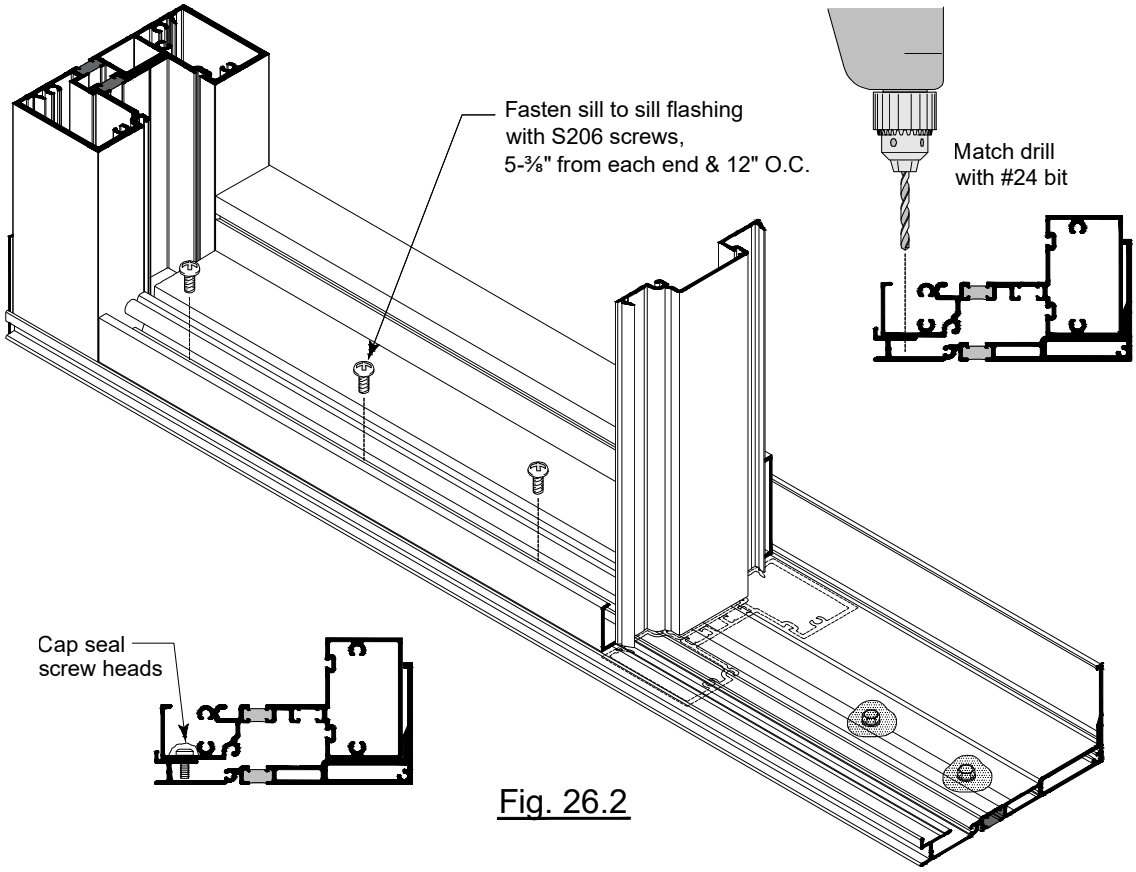


Fig. 26.2

# FRAME INSTALLATION

Step 14: Install Frames (Continued)

G. Shim head and jamb at anchor points and attach to structure with flat head fasteners. SEE Fig. 27.1

H. Match drill the vertical mullion through the vertical pocket closure with drill #23 (.154 dia) pilot hole for #10 screw. Fasten pocket closure to mullion with S161 #10-24 x 1/2" UC FH. SEE Fig. 27.2.

I. Once the frame is anchored to the structure, apply exterior perimeter seal at head, sill and jambs. At interior, apply perimeter seal at head and jambs. Seal at sill flashing is for cosmetic purposes as required. SEE Fig. 27.3.

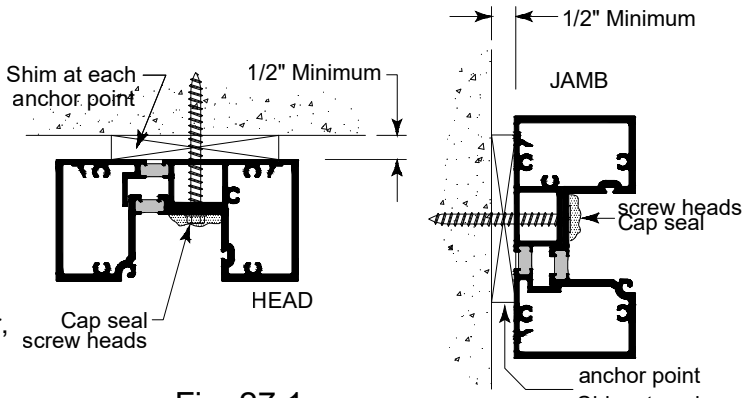


Fig. 27.1
STANDARD ANCHOR

Step 15: Glazing Preparation

A. Remove any debris from glazing pockets.

B. Trim excess silicone from edges of glazing units to allow for maximum glazing clearance.

C. Clean areas where structural silicone will be applied.

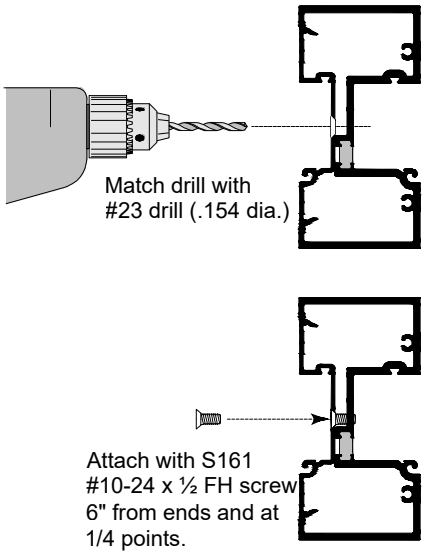


Fig. 27.2

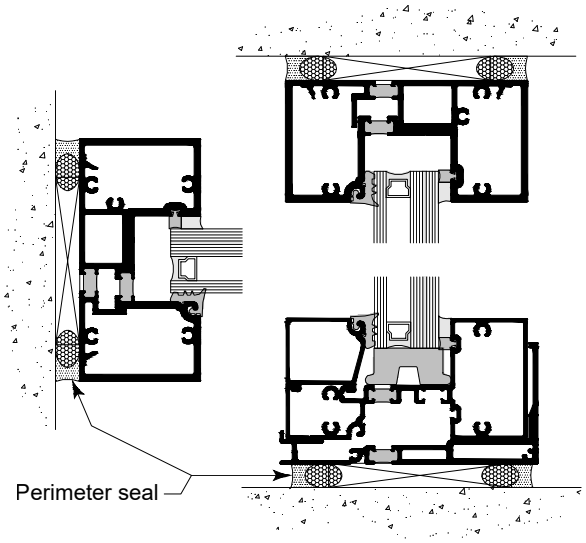


Fig. 27.3

TUBELITE®
DEPENDABLE
LEADERS IN ECO-EFFICIENT STOREFRONT, CURTAINWALL AND ENTRANCE SYSTEMS

# GLAZING

## Step 16: Installing Glazing Units

NOTE: Glazing must be done from bottom of frame up.

NOTE: Laminated portion of the glazing unit must always be installed towards the interior.

A. for dry glazing, install P6586 interior gasket, sealing the corners of the gaskets per Fig.28.1. For wet glazing, install P6587 at the interior. SEE Fig.29.1.

B. Set glass by installing into deep pocket first, then carefully sliding into shallow pocket. When contact is made with the shallow pocket, set glass onto (2) P6541 setting blocks located at quarter points or per approved shop drawings.

C. **DRY GLAZING ONLY**: Install anti-walk blocks P1916 into deep pockets at third-points of the D.L.O. Stretch the P1916 so that it fits between the aluminum glazing reglet and glass. Push in until the 'W' shape expands into the opening between the glass and the deep pocket.

D. Install P6503 exterior gasket on the vertical sides of the glass, holding back at the bottom to allow for glass stop installation.

E. Install E34104 glass stop at the bottom of the lite.

F. Finish installing gaskets at top and bottom of D.L.O.

G. Repeat steps 16.A-F for the remainder of the row.

H. Prior to moving to the next row of lites, install water diverter P6581 at ends of intermediate horizontal. NOTE: Position water diverter to cover glass corner. Seal diverter to horizontal, leaving the gap at the front and side open in the vertical glazing pocket. SEE Fig.28.2.

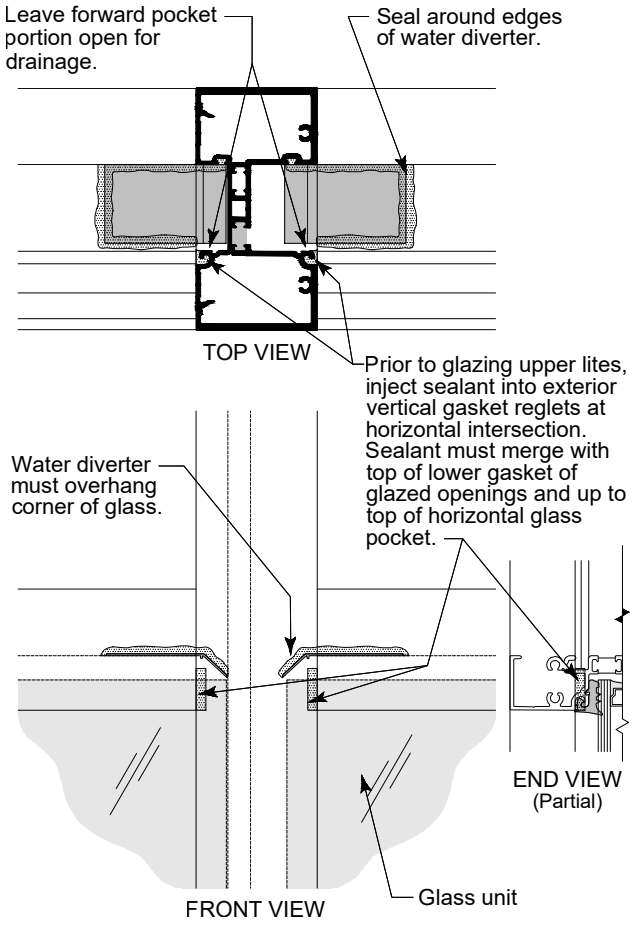


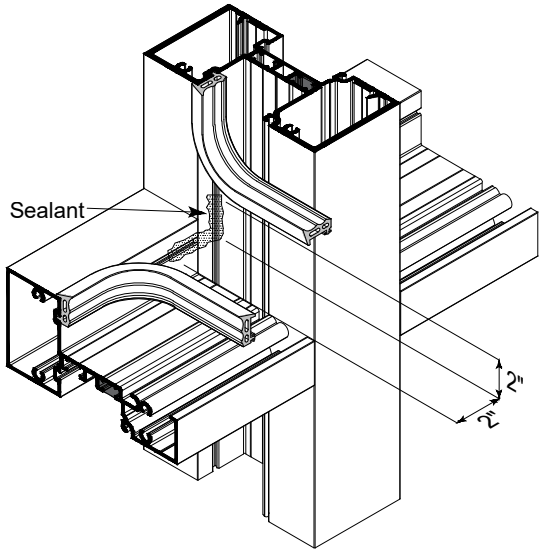


Fig. 28.1

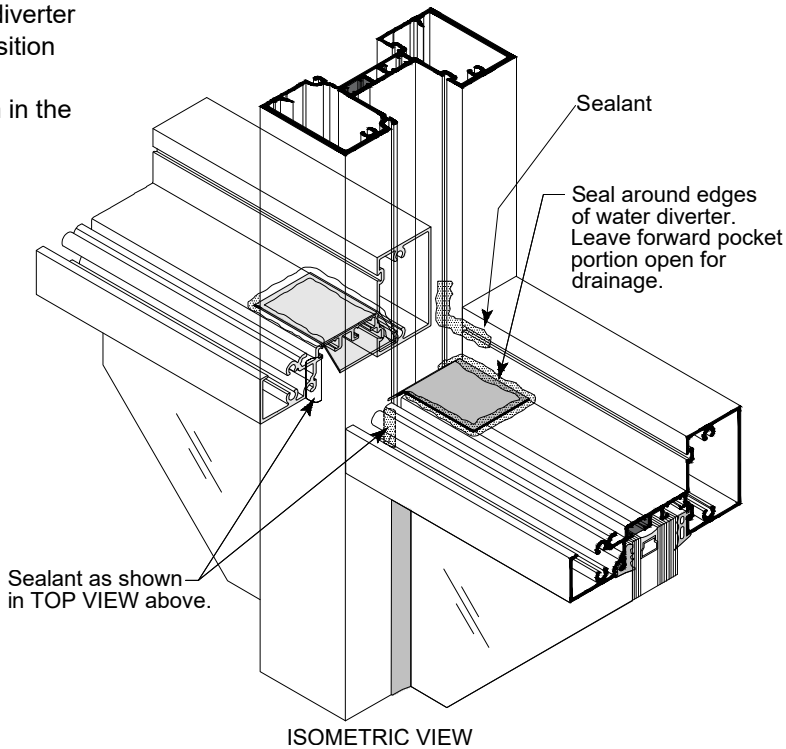


Fig. 28.2

# GLAZING

Step 17: Wet Glazing

A. Apply low adhesion masking tape to surface of frame and glass. Apply masking tape to glass 1/8" above the plane of the frame. SEE Fig. 29.1.

B. From bottom to top, apply DOW 995 structural silicone in cavity between the silicone spacer and glass. Make sure the entire void is filled with no air bubbles or voids in the sealant.

C. Using a beveled non-scratching instrument, tool the sealant immediately after applying the silicone. The resulting joint should have a slight bevel rising from the frame to the glass. SEE Fig. 29.1.

D. Remove masking tape from glass and frame before the silicone skins over.

E. Repeat steps 17.A-D until all units are wet glazed.

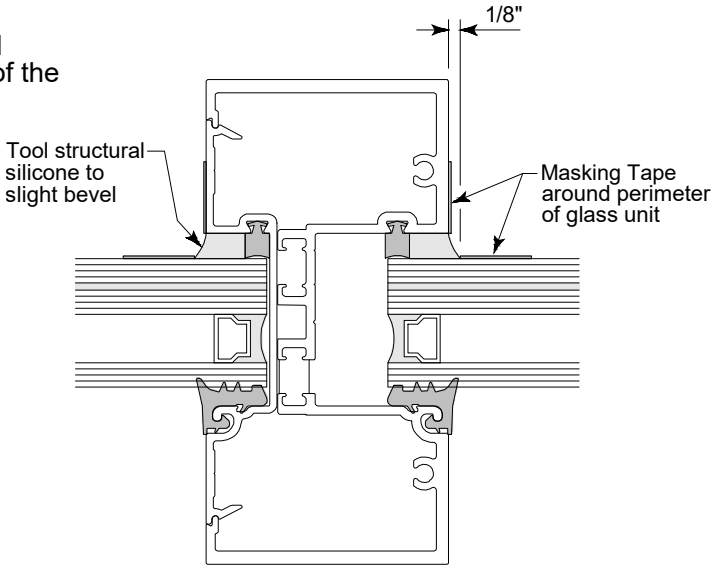


Fig. 29.1

TUBELITE®
DEPENDABLE
LEADERS IN ECO-EFFICIENT STOREFRONT, CURTAINWALL AND ENTRANCE SYSTEMS

# DOOR and FRAME INSTALLATION

## Step 18: Preparation

A. Doors are shipped assembled from factory. Door frames are fabricated and shipped KD.

B. Frames with transoms are cut long for final adjustment in the field. Once final door frame height is verified in the field and door jambs are cut down, use drill fixture P3439 to fabricate the tops of the door jamb verticals for the transom head member.

## Step 19: Frame Assembly

A. Apply sealant to the ends of the door header and transom head members.

B. Attach the door header and transom header to the door jambs with (4) S419 #12-14 x 1 1/2" HWH frame assembly screws. Attach the P3497 threshold clips to the door jambs with (2) S293 #12 x ½" FH UC screws. SEE Fig. 30.1 - Fig. 30.4.

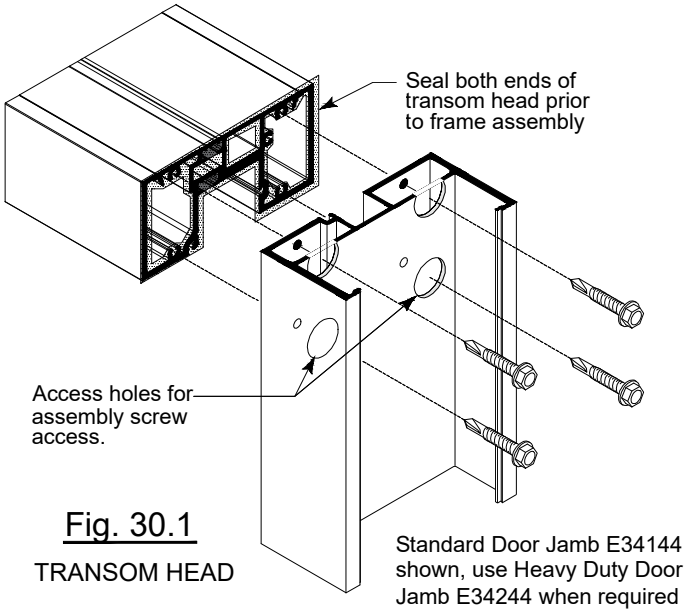


Fig. 30.1
TRANSOM HEAD

Standard Door Jamb E34144 shown, use Heavy Duty Door Jamb E34244 when required

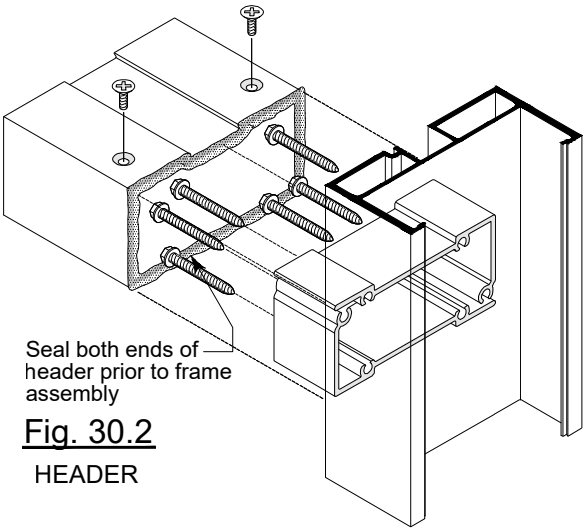


Fig. 30.2
HEADER

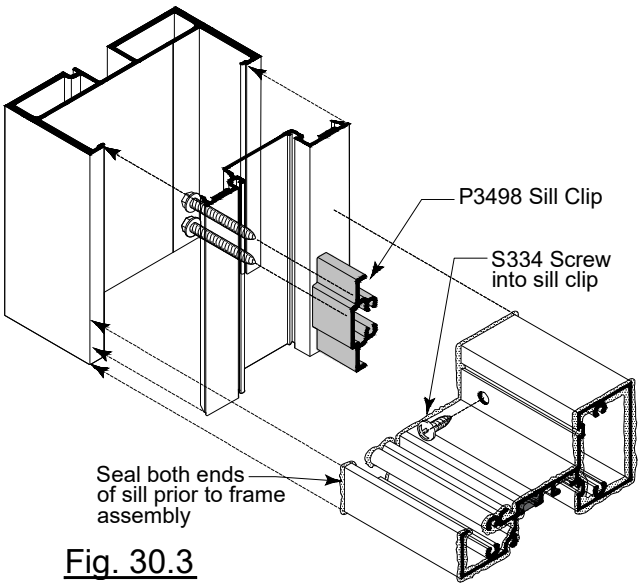


Fig. 30.3
SILL CLIP ATTACHMENT

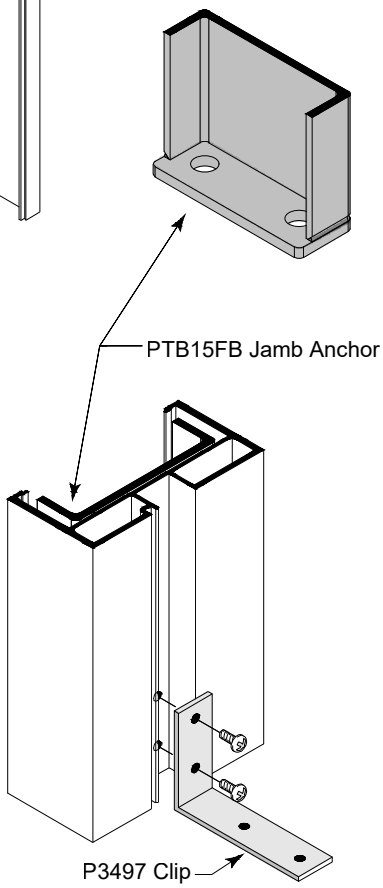


Fig. 30.4
THRESHOLD

# DOOR and FRAME INSTALLATION

Step 20: Frame Assembly (Continued)

C. Attach inner door stop to jambs with S419 #12-24 x 1-1/2" HH screws. See **Fig. 31.1**.
NOTE: Refer to **Table 31.1** for screw spacing at specified charge weight & standoff distances noted.

D. Attach the threshold to the door jamb clips with (2) S070 screws provided. Attach threshold to substrate with screws per approved shop drawings. See **Fig. 31.3**.

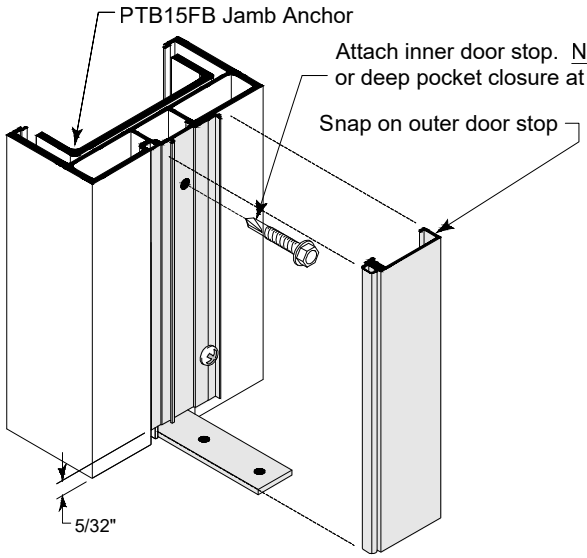


Fig. 31.1

| DOOR STOP ATTACHMENT - 34000 | | | |
|---|---|---|---|
| EXTRUSION | SCREW SIZE | SCREW SPACING | SCREW SPACING AT HEAD (PAIR ONLY) |
| E34306 | #12 MIN | 17" | 2" (3 TOTAL) |
| E34308 | #12 MIN | 19" | 2" (2 TOTAL) |
| E34341 | #12 MIN | 12-1/2" | 2" (4 TOTAL) |
| E34342 | #12 MIN | 12" | 2" (4 TOTAL) |

FOR 120 LBS/IN LOADS AT HEAD & JAMBS

**Table 31.1**

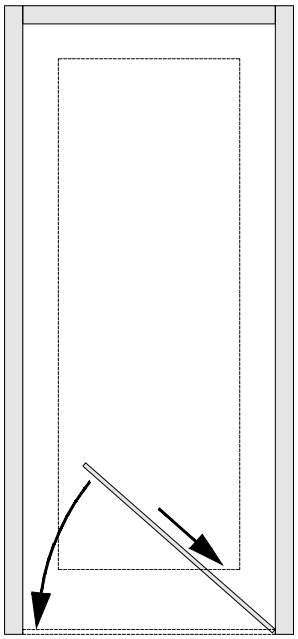

Insert one end of threshold then rotate down until resting on finished floor.

Fig. 31.2

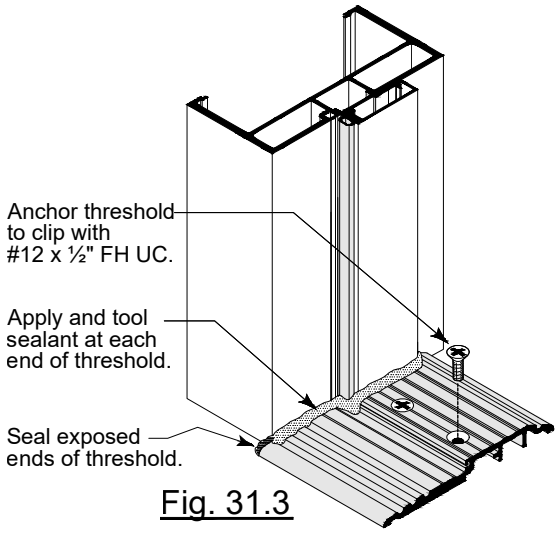


Fig. 31.3

TUBELITE®
DEPENDABLE
LEADERS IN ECO-EFFICIENT STOREFRONT, CURTAINWALL AND ENTRANCE SYSTEMS

# DOOR and FRAME INSTALLATION

## Step 21: Installing Door Frame

A. Prior to installing door frame, run a bead of silicone on finished floor where threshold will be placed. SEE Fig. 32.1.

B. Set assembled door frame into opening. Door frames must be installed plumb, square and level. For frames having sidelites, seal termination of sill flashing and door jamb, then install P3426 sill block into sill flashing adjacent to the door frame. SEE Fig. 32.2.

C. Shim the threshold as required to level and secure to the building floor.

D. Install inner door stops E6510 to door jambs 2" from ends and 12" O.C. with S206. Inner door stop should be held back 1/8" from the finish floor at bottom.

E. Snap outer door stops E6505 onto inner door stops. Like the inner door stop, the outer door stop should be held back 1/8" from the finish floor at bottom.

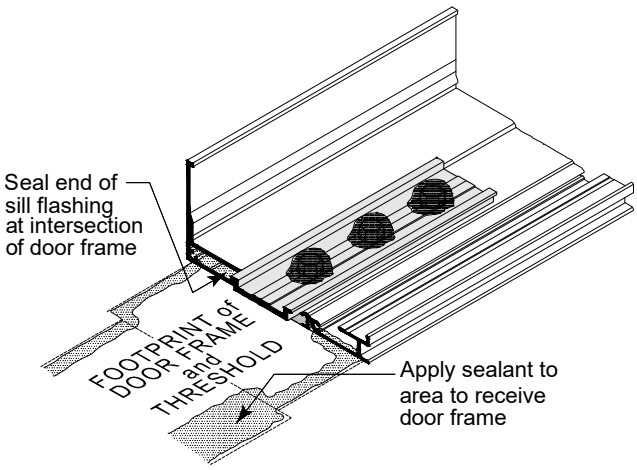


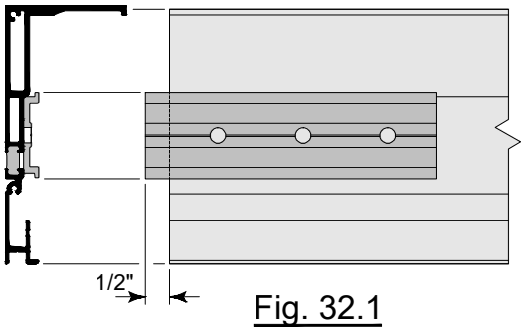


Fig. 32.1

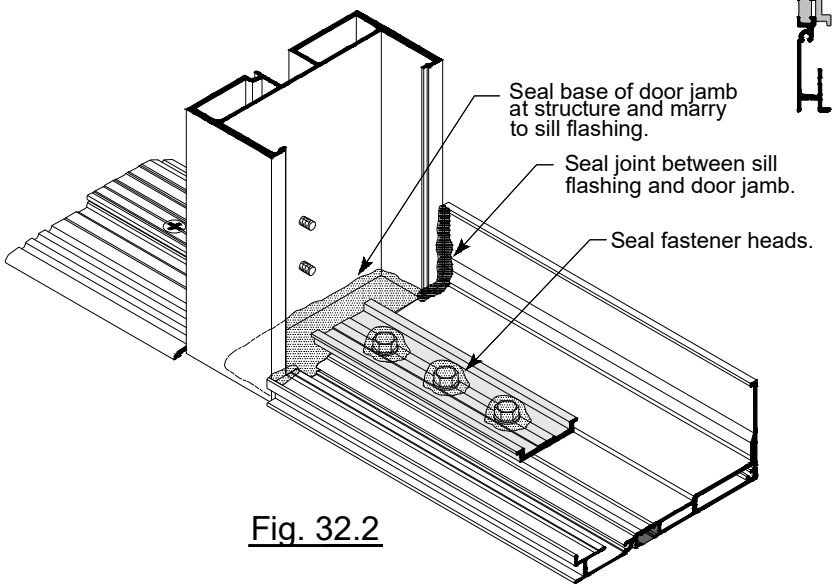


Fig. 32.2

## Step 22: Door Installation

A. Refer to Tubelite's 'Door and Frame Installation Instructions' for installing the door into the frame.

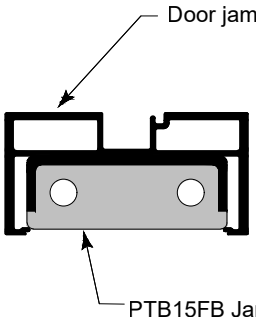


NOTE: Pre-install PTB15FB Jamb Anchor to jamb prior to door jamb installation

# DOOR and FRAME INSTALLATION

## Step 23: Transom Sash Sealing

A. Install horizontal sash member E34006 with S270 #10-24 x 3/4" PH 2" from ends and 12" O.C. E34006 sash runs continuous between the door jamb members.

B. Install vertical sash member E3521 with S206 #10-24 x 1/2" PH 2" from ends and 12" O.C. E3521 runs from top of the E34006 horizontal sash to the underside of the transom head member.

C. Dam ends of E34006 horizontal sash with sealant into the door stop pocket on the door jamb. SEE Fig. 33.1.

D. Install glazing gaskets, glass, setting blocks and glass stops according to typical glazing instructions mentioned previously in the GLAZING section of this manual.

E. Place a cap bead of sealant around the inside and outside of the E34006 and E3521 sash members. SEE Fig. 33.2.

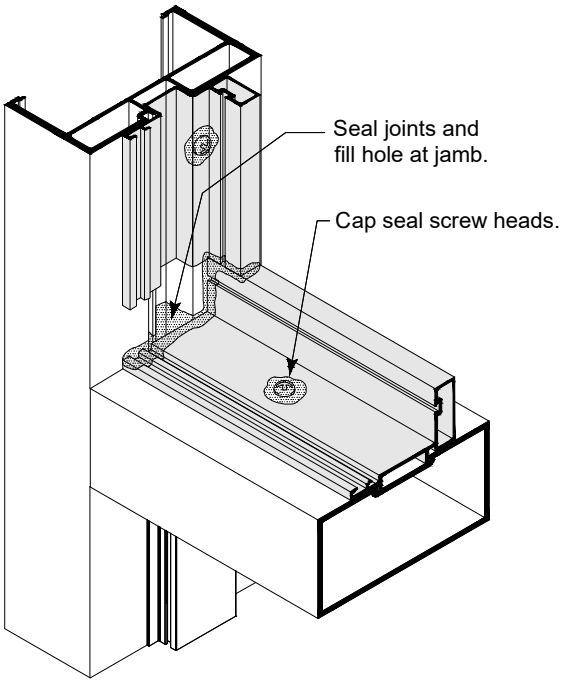


Fig. 33.1

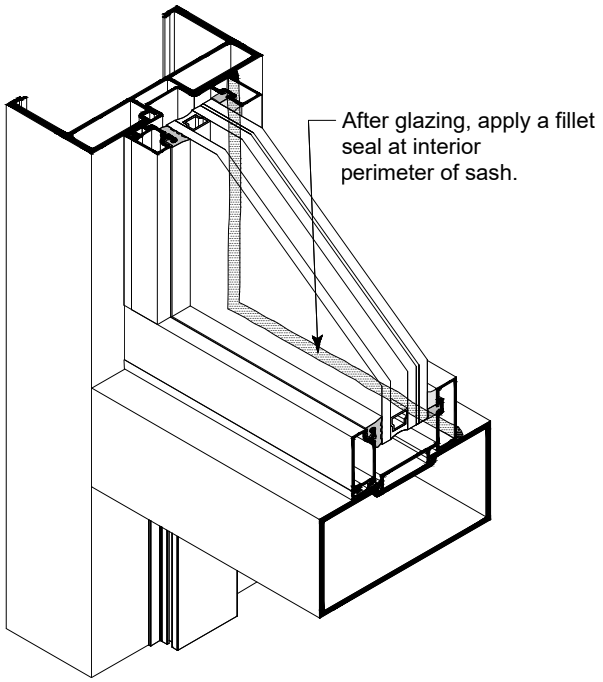


Fig. 33.2

# DOOR and FRAME INSTALLATION

## Step 24: Door Glazing

Wet Glazing:

A. Fasten interior door glass stop to rails and stile of the door with S6504 #6-32 x 1” FH 2” from ends and 6” O.C. NOTE: this is normally performed by the factory.

B. Apply 3/16” x 1/2” Tremco SGT921 One-Sided glazing tape (Not Included) to interior door glass stop all around the door. SEE Fig. 34.1.

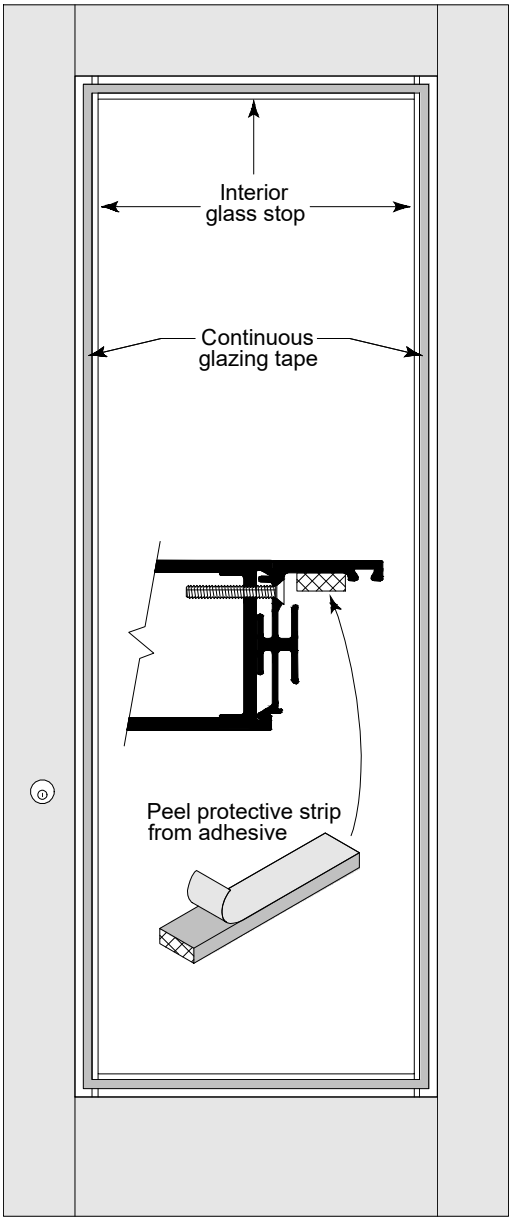


Fig. 34.1
Glazing tape at wet glaze door

# DOOR and FRAME INSTALLATION

Step 24: Door Glazing (Continued)

Wet Glazing:

C. After hanging the door, place P1912 self adhesive setting blocks in three locations on E6502 Glazing gutter. Fig. 35.1.

D. Note: Gasket is pre-installed in the glazing stops in the factory.

E. Install glass in door.

F. Install vertical then horizontal glass stop at bottom.

G. Square up door as desired and block in place.

H. Place two wedge blocks as shown in Fig. 35.2. If together properly the wedge blocks will interlock and form two flat surfaces.

I. With the wedge blocks in place, push them together increasing the thickness. Push together until they press tightly against the underside of the glazing gutter and top of the glass holding the door square.

J. Install top horizontal glass stop.

K. To square up the door in the future, remove top horizontal glass stop and repeat steps G through J.

L. Apply low adhesion masking tape to surface of glass stop and glass.

M. From bottom to top, apply DOW 995 structural silicone in cavity between the glazing tape and glass. Make sure the entire void is filled with no air bubbles or voids in the sealant.

N. Using a beveled non-scratching instrument, tool the sealant immediately after applying the silicone.

O. Remove masking tape from the glass and glass stop before the silicone skins over.

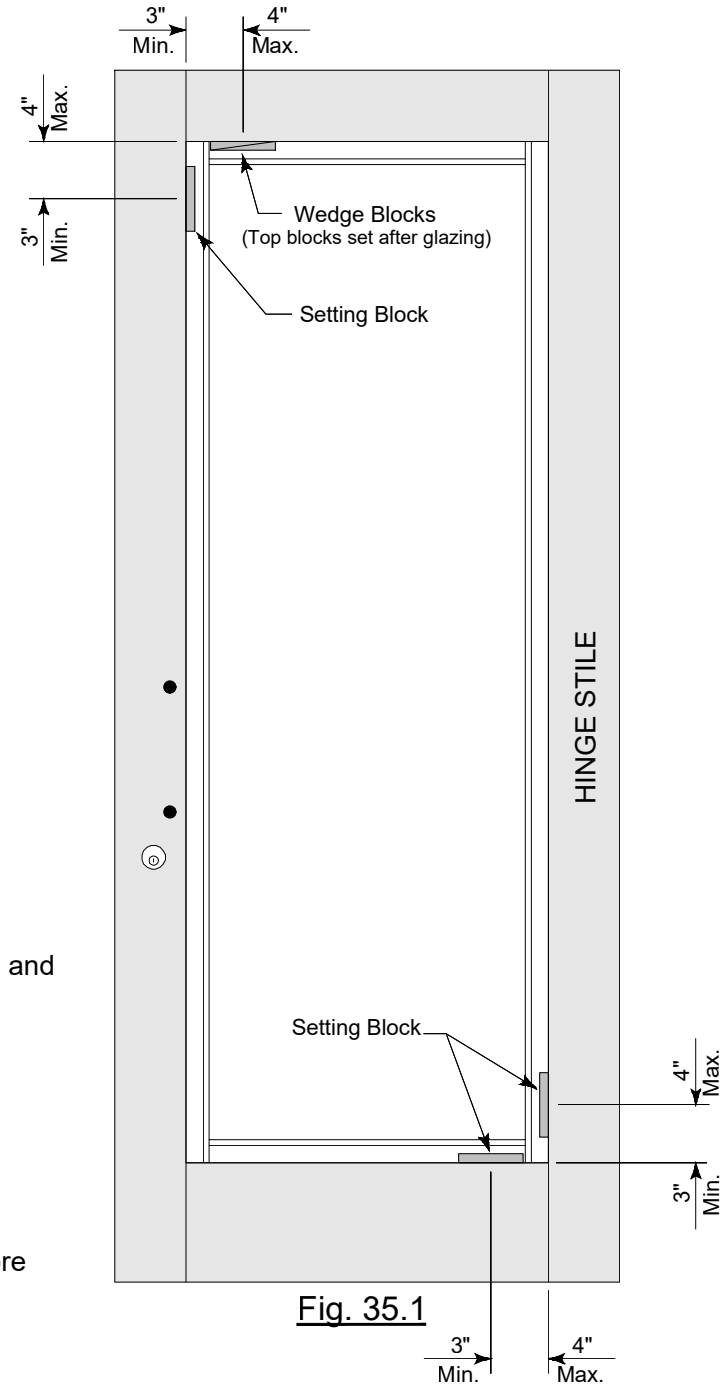


Fig. 35.1

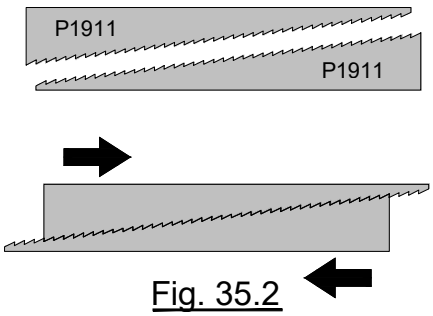


Fig. 35.2