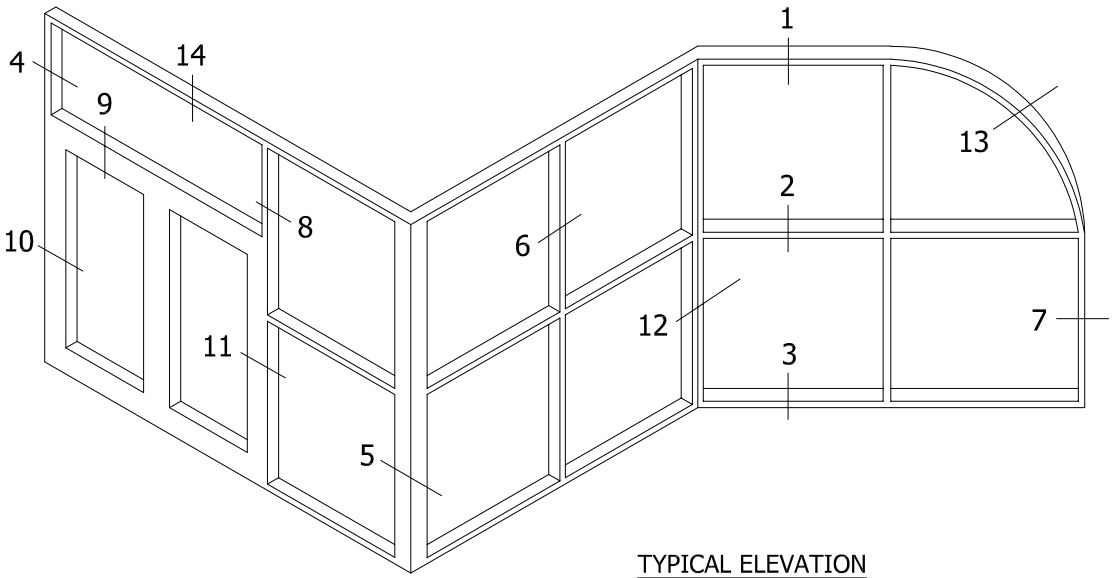

TYPICAL ELEVATION

1 HEAD STANDARD

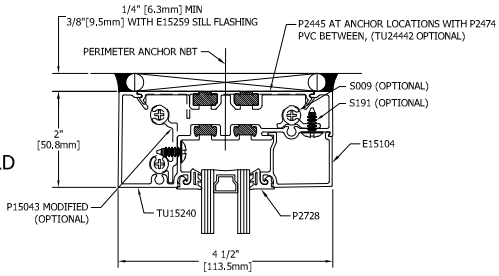

1 HEAD STANDARD

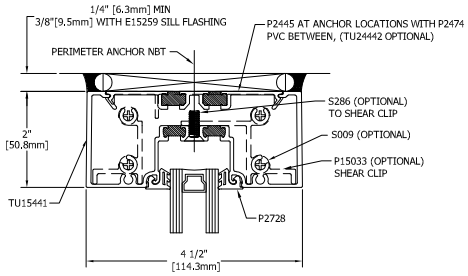

2 HORIZONTAL STANDARD

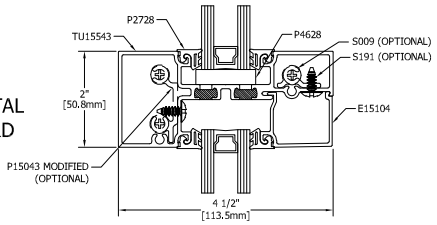

2 HORIZONTAL STANDARD

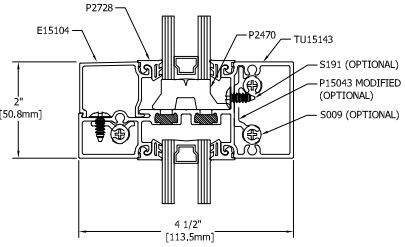

3 SILL STANDARD

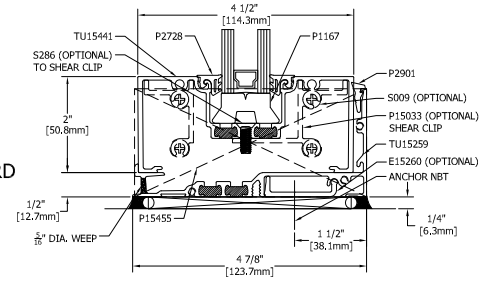

3 SILL STANDARD

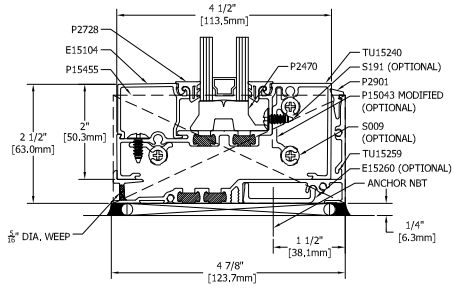

INSIDE GLAZED

OUTSIDE GLAZED

Standard Details
1/4 scale

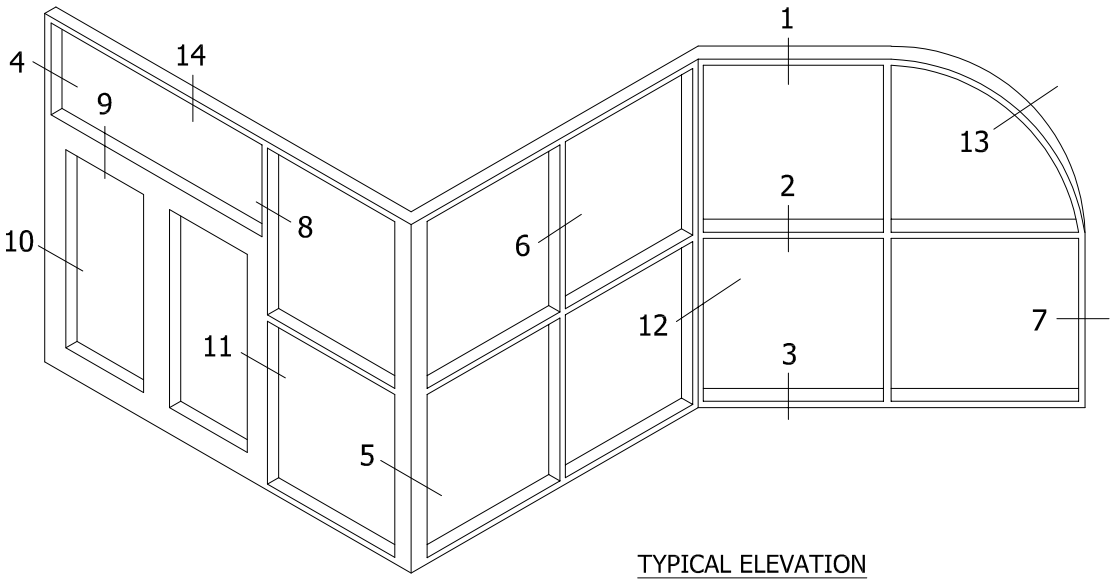

TYPICAL ELEVATION

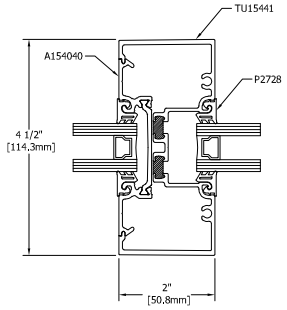

6
VERTICAL
STANDARD

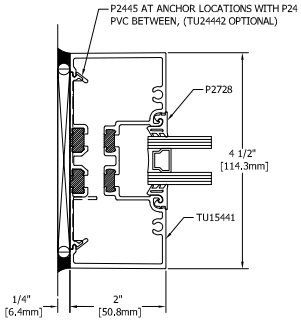

7
JAMB
STANDARD

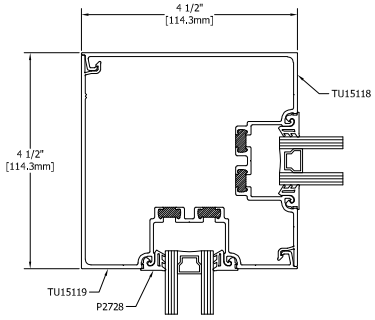

12
I.S. 90° CORNER
STANDARD

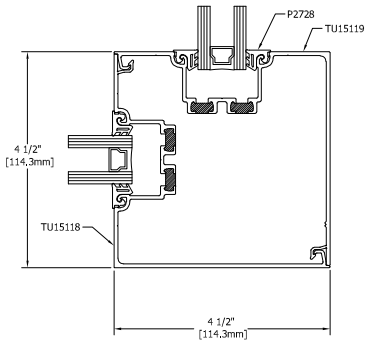

5
O.S. 90° CORNER
STANDARD

INSIDE & OUTSIDE GLAZED

Standard Details
1/4 scale

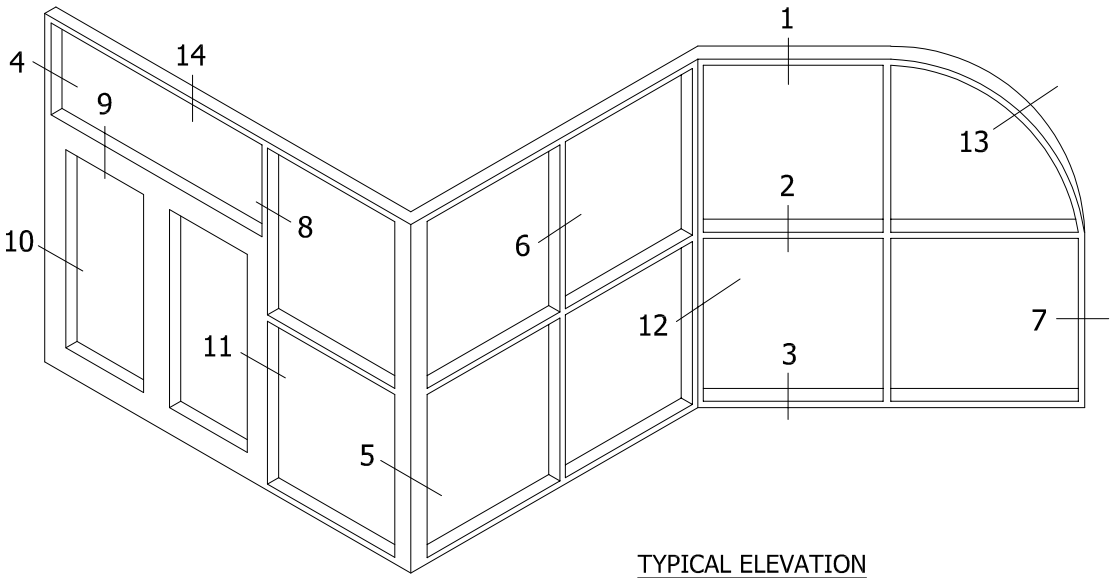

TYPICAL ELEVATION

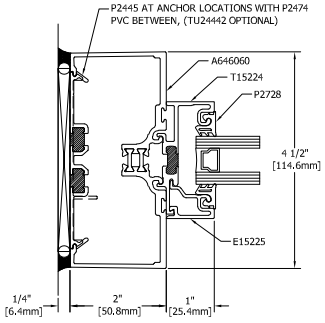

4
DOOR JAMB
TRANSOM
STANDARD

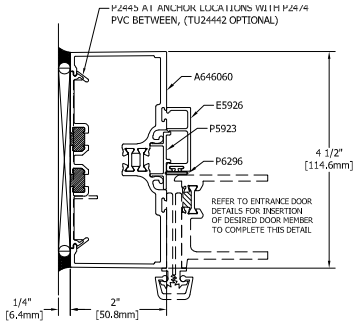

10
DOOR JAMB
STANARD

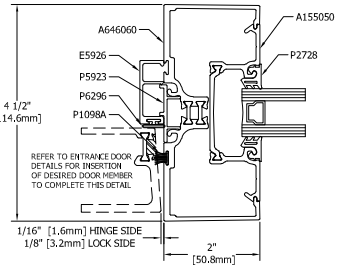

11
DOOR JAMB
STANDARD

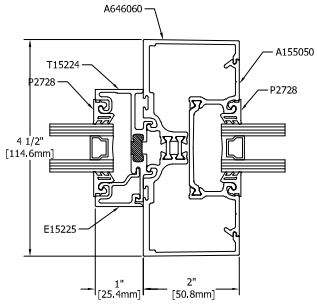

8
VERTICAL
TRANSOM
STANDARD

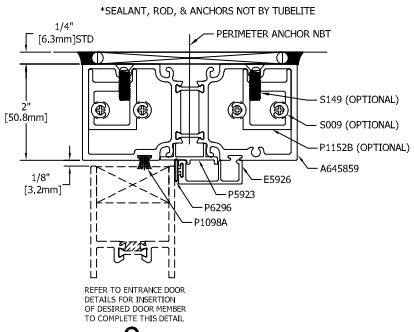

9
DOOR HEADER
(NON-TRANSOM)
STANDARD

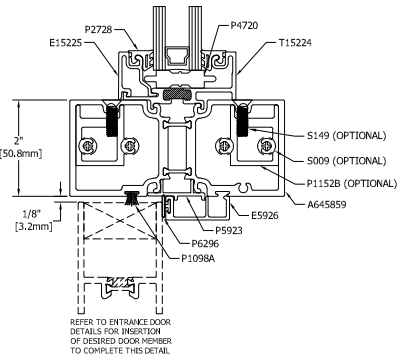

9A
DOOR HEADER
STANDARD

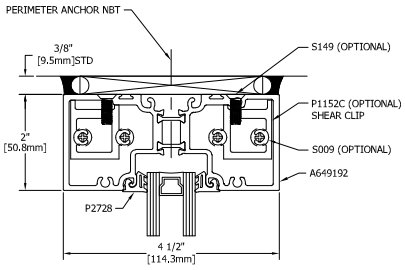

14
DOOR TRANSOM
STANDARD

DOOR DETAILS

Standard Details
1/4 scale